Industrial SD Card

SD Series

Customer: _____

Customer Part Number: _____

Innodisk Part Number: _____

Innodisk Model Name: _____

Date: _____

the total solution for industrial flash storage

Table of contents

1. PRODUCT INTRODUCTION 7

1.1. OVERVIEW 7
1.2. PRODUCT PICTURE 7
1.3. PRODUCT FEATURES 7

2. THEORY OF OPERATION 8

2.1. OVERVIEW 8
2.2. ERROR DETECTION AND CORRECTION ECC 8
2.3. WEAR-LEVELING 8
2.4. BAD BLOCKS MANAGEMENT 9

3. SPECIFICATIONS 9

3.1. MECHANICAL DIMENSIONS 9
3.2. PERFORMANCE 10
3.3. NAND FLASH MEMORY 10
3.4. POWER REQUIREMENT 10
3.4.1. DC Input Voltage 10
3.4.2. Power Mode 10
3.4.3. Power Consumption 10
3.5. STORAGE TEMPERATURE RANGE 10
3.6. HUMIDITY 10
3.7. SHOCK AND VIBRATION 11
3.8. SYSTEM RELIABILITY 11
3.8.1. ECC Technology 11
3.8.2. Mean Time between Failures (MTBF) 11
3.8.3. Enhanced Power Cycling Technology 11
3.9. CERTIFICATE 12
3.10. PIN DESCRIPTION 12
3.10.1. Industrial SD Card Pin Direction 12
3.10.2. Pin Assignment 12

4. ELECTRICAL SPECIFICATIONS 13

4.1. GENERAL DC CHARACTER 13
4.2. BUS SIGNAL LINE LOADING 13
4.3. BUS SIGNAL LEVEL 14
4.4. BUS TIMING (HIGH SPEED MODE) 14

5. REGISTER TABLE 15

5.1. OPERATION CONDITION REGISTER (OCR) 15
5.2. CARD IDENTIFICATION REGISTER (CID) 16
5.3. RELATIVE CARD ADDRESS REGISTER (RCA) 16
5.4. CARD SPECIFIC DATA REGISTER (CSD) 16
5.5. SD CARD CONFIGURATION REGISTER (SCR) 19

6. COMMANDS 20

7. PART NUMBER RULE 25

REVISION HISTORY

Revision	Description	Date
Preliminary	First released	7/12/2010
1.0	1. Update performance information for 1GB	9/8/2010
1.1	1. Added SD Bus Mode Command Table	9/202010
1.2	1. Add Part Number Rule 2. Updated speed info. for 128MB	5/23/2011
1.3	1. Modify description	8/9/2011
1.4	1. Add 16GB capacity	7/3/2012
1.5	1. Add description about power cycling	7/20/2012
1.6	1. Modify description of performance	8/10/2012
1.7	1. Add Golden finger 30u” 2. Modify Part Number Rule	5/15/2013
1.8	Add 32GB capacity	6/17/2013
1.9	Modify Part Number Rule	9/14/2013

List of Tables

TABLE 1: INNODISK INDUSTRIAL SD CARD POWER CONSUMPTION 10
TABLE 2: SHOCK/VIBRATION TESTING FOR INNODISK INDUSTRIAL SD CARD 11
TABLE 3: INNODISK INDUSTRIAL SD CARD MTBF 11
TABLE 4: INNODISK INDUSTRIAL SD CARD PIN ASSIGNMENT 12
TABLE 5: GENERAL DC CHARACTER 13
TABLE 6: BUS SIGNAL LINE LOADING 13
TABLE 7: BUS SIGNAL LEVEL 14
TABLE 8: HIGH SPEED MODE BUS TIMING 15
TABLE 9: INNODISK INDUSTRIAL SD CARD OCR TABLE 15
TABLE 10: INNODISK INDUSTRIAL SD CARD CID TABLE 16
TABLE 11: INNODISK INDUSTRIAL SD CARD CSD TABLE FOR HIGH CAPACITY 17
TABLE 12: INNODISK INDUSTRIAL SD CARD CSD TABLE FOR STANDARD CAPACITY 18
TABLE 13: INNODISK INDUSTRIAL SD CARD SCR TABLE 19
TABLE 14: SD BUS MODE COMMAND TABLE 20

List of Figures

FIGURE 1: INDUSTRIAL SD CARD PICTURE 7
FIGURE 2: INNODISK INDUSTRIAL SD CARD ARCHITECTURE 8
FIGURE 3: INNODISK INDUSTRIAL SD CARD MECHANICAL DIMENSIONS 9
FIGURE 4: SIGNAL SEGMENT AND POWER SEGMENT 12
FIGURE 5: BUS SIGNAL LEVEL 14
FIGURE 6: TIMING DIAGRAM DATA INPUT/OUTPUT REFERENCED TO CLOCK 14

1. Product Introduction

1.1. Overview

Innodisk Industrial SLC SD Card is a slim and low power consumed storage module that designed especially for portable devices. Innodisk Industrial SLC SD Card is compatible with SD 2.0/1.1/1.01 standard and supports SDHC Class 10 that provides excellent performance. The built-in auto ECC function can also detect and correct errors during data transfer. Moreover, Innodisk Industrial SLC SD Card supports standby and sleep mode that reduces power consumption in advance for application with limited power source.

1.2. Product Picture



Figure 1: Industrial SD Card picture

1.3. Product Features

- Interface: 9 pins SD standard interface
- SLC NAND Flash
- Capacity
  - SD: 128MB, 256MB, 512MB, 1GB, 2GB
  - SDHC: 4GB, 8GB, 16GB, 32GB
  - Data transfer rate (Max.): Read: 20MB/sec, Write: 16MB/sec
- Built-in ECC corrects up to 24 bits per 1 KB
- Durability
  - Insertion/removal: 10,000 cycles
  - Write protect switch: 1,000 cycles

- Dimension: 24.00 x 32.00 x 2.10 mm
- Enhanced Power Cycling: Pass 1,000 times copy and compare test under Non-Safe Mode/Safe Mode.
- Golden finger 30u".

2. Theory of operation

2.1. Overview

Figure 2 shows the operation of Innodisk Industrial SD Card from the system level, including the major hardware blocks.

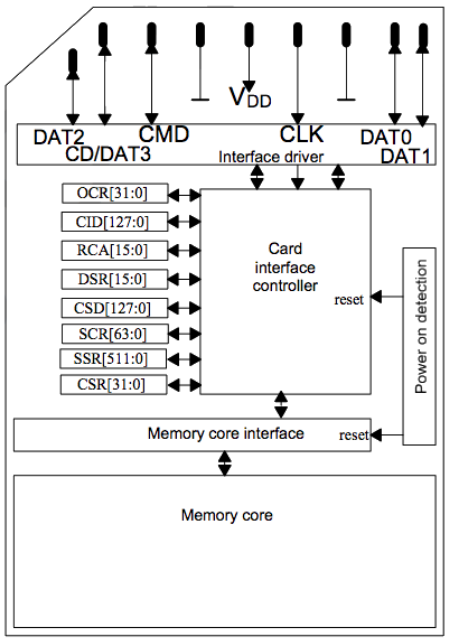

Figure 2: Innodisk Industrial SD Card Architecture

2.2. Error Detection and Correction ECC

Highly sophisticated Error Correction Code algorithms are implemented. The ECC unit consists of the Parity Unit (parity-byte generation) and the Syndrome Unit (syndrome-byte computation). This unit implements an algorithm that can correct 16 bits per 1 KB in an ECC block. Code-byte generation during write operations, as well as error detection during read operation, is implemented on the fly without any speed penalties.

2.3. Wear-Leveling

Flash memory can be erased within a limited number of times. This number is called the ***erase cycle limit*** or ***write endurance limit*** and is defined by the flash array vendor. The erase cycle limit applies to each individual erase block in the flash device.

Innodisk Industrial SD Card uses a wear-leveling algorithm to ensure that consecutive writes of a specific sector are not written physically to the same page and block in the flash. This spreads flash media usage evenly across all pages, thereby extending flash lifetime.

2.4. Bad Blocks Management

Bad Blocks are blocks that contain one or more invalid bits whose reliability are not guaranteed. The Bad Blocks may be presented while the SD is shipped, or may develop during the life time of the SD. The Bad Blocks will not exceed more than 3% of the total device volume. When the Bad Blocks is detected, it will be flagged, and not be used anymore. The SD implement Bad Blocks management, Bad Blocks replacement, Error Correct Code to avoid data error occurred. The functions will be enabled automatically to transfer data from Bad Blocks to spare blocks, and correct error bit.

3. Specifications

3.1. Mechanical Dimensions

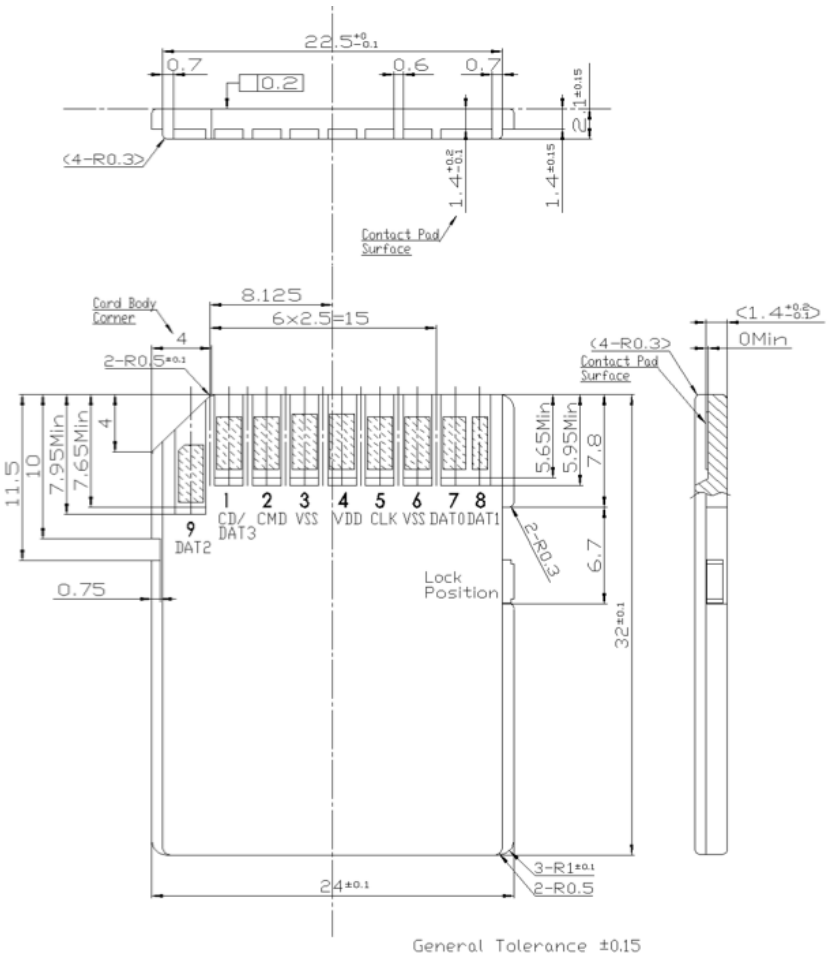

Figure 3: Innodisk Industrial SD Card mechanical dimensions

3.2. Performance

Data Transfer Rate (Sequential Read/Write, Max.)

- Class 10: 4GB, 8GB, 16GB, 32GB
  - 20/16 MB/sec
- Class 6: 128MB, 256MB, 512MB, 1GB, 2GB
  - 19/12 MB/sec

3.3. NAND Flash Memory

Innodisk Industrial SLC SD Card uses Single Level Cell (SLC) NAND flash memory, which is non-volatility, high reliability and high speed memory storage. Read or Write data to flash memory for SD is control by micro processor.

3.4. Power Requirement

3.4.1. DC Input Voltage

2.7V to 3.6V

3.4.2. Power Mode

Auto stand-by and sleep mode

3.4.3. Power Consumption

Table 1*:* Innodisk Industrial SD Card power consumption

Sustained Read	40 mA
Sustained Write	60 mA
IDLE	180 μA

3.5. Storage Temperature Range

- Operating Temperature Range
  - Standard Grade: 0°C to +70°C
  - Wide Temp: -40°C to +85°C
- Storage Temperature Range: -55°C to +95°C

3.6. Humidity

Relative Humidity: 10-95%, non-condensing

3.7. Shock and Vibration

Table 2: Shock/Vibration Testing for Innodisk Industrial SD Card

Reliability	Test Conditions
Vibration	7 Hz to 2000 Hz, 5G, 3 axes
Mechanical Shock	Duration: 10ms, 50G, 3 axes

3.8. System Reliability

3.8.1. ECC Technology

High reliability based on the internal error correct code (ECC) function. Built-in ECC corrects up to 16 bits per 1 KB.

3.8.2. Mean Time between Failures (MTBF)

Table 2 summarizes the MTBF prediction results for various Innodisk Industrial SD Card configurations. The analysis is performed using a RAM Commander™ failure rate prediction.

- **Failure Rate**: The total number of failures within an item population, divided by the total number of life units expended by that population, during a particular measurement interval under stated condition.
- **Mean Time between Failures (MTBF)**: A basic measure of reliability for repairable items: The mean number of life units during which all parts of the item perform within their specified limits, during a particular measurement interval under stated conditions.

Table 3: Innodisk Industrial SD Card MTBF

Product	Condition	MTBF (Hours)
Innodisk Industrial SD Card	Telcordia SR-332 GB, 25°C	> 4,000,000

3.8.3. Enhanced Power Cycling Technology

In order to make sure Innodisk Industrial SD Card can work well under unstable power supply environments. Our FW enhance the power cycling ability and pass following test modes with 1,000 times.

- **Non-Safe Mode test**: Power off when accessing files.
- **Safe Mode test**: Power off when accessing files finish.

3.9. Certificate

- **CE and FCC Compatibility**
  Innodisk Industrial SD Card conforms to CE and FCC requirements.
- **RoHS Compliance**
  Innodisk Industrial SD Card is fully compliant with RoHS directive.

3.10. Pin Description

3.10.1. Industrial SD Card Pin Direction

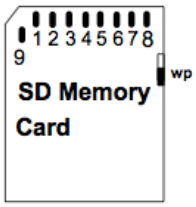

Figure 4: Signal Segment and Power Segment

3.10.2. Pin Assignment

Table 4 demonstrates Innodisk Industrial SD Card pin assignments.

Table 4: Innodisk Industrial SD Card Pin Assignment

Pin #	SD Mode			SPI Mode		
	Name	Type[1]	Description	Name	Type[1]	Description
1	CD/DAT3[2]	I/O/PP[3]	Card Detect/Data Line [Bit 3]	CS	I[3]	Chip Select (neg true)
2	CMD	I/O/PP	Command/Response	DI	I	Data In
3	V_{SS1}	S	Supply voltage ground	V_{SS}	S	Supply voltage ground
4	V_{DD}	S	Supply voltage	V_{DD}	S	Supply voltage
5	CLK	I	Clock	SCLK	I	Clock
6	V_{SS2}	S	Supply voltage ground	V_{SS2}	S	Supply voltage ground
7	DAT0	I/O/PP	Data Line [Bit 0]	DO	O/PP	Data Out
8	DAT1[4]	I/O/PP	Data Line [Bit 1]	RSV		
9	DAT2[5]	I/O/PP	Data Line [Bit 2]	RSV		

1) S: power supply; I: input; O: output using push-pull drivers; PP: I/O using push-pull drivers

2) The extended DAT lines (DAT1-DAT3) are inout on power up. They start to operate as DAT lines after SET_BUS_WIDTH command. The Host shall keep its own DAT1-DAT3 lines in input mode, as well, while they are not used.

3) At power up this line has a 50KOhm pull up enabled in the card. This resistor serves two functions Card detection and Mode Selection. For Mode Selection, the host can drive the line high or let it be pulled high to select SD mode. If the host wants to select SPI mode it should drive the line low. For Card deception, the host detects that

the line is pulled high. This pull-up should be disconnected by the user, during regular data transfer, with SET_CLR_CARD_DETECT (ACMD42) command.

4) DAT1 line may be used as Interrupt Output (from the Card) in SDIO mode during all the times that it is not in use for data transfer operations (refer to "SDIO Card Specification" for further details).

5) DAT2 line may be used as Read Wait signal in SDIO mode (refer to "SDIO Card Specification" for further details).

4. Electrical Specifications

4.1. General DC Character

Table 5: General DC Character

Parameter	Symbol	Min.	Max.	Unit	Remark
Peak voltage on all lines		-0.3	3.6	V	
All input leakage current		-10	10	μA	
All output leakage current		-10	10	μA	
Supply voltage for low voltage range	V_{DDL}	1.7	1.95	V	
Supply voltage for high voltage range	V_{DDH}	2.7	3.6	V	
Supply voltage differential		-0.5	0.5	V	

4.2. Bus Signal Line Loading

Table 6: Bus Signal Line Loading

Parameter	Symbol	Min.	Max.	Unit	Remark
Pull up resistance for SDC line	R_{CMD}	10	100	K Ohm	To prevent bus floating
Pull up resistance for SDD line	R_{DAT}	10	100	K Ohm	To prevent bus floating
Total Bus capacitance for each signal line	C_L		40	pF	Single card $C_{HOST}+C_{BUS}$ shall not exceed 30 pF
Signal line inductance			16	nH	f_{PP} <= 20 MHZ
Pull-up resistance inside card (pin 1)	R_{DAT3}	10	90	K Ohm	May be used for card detection

4.3. Bus Signal Level

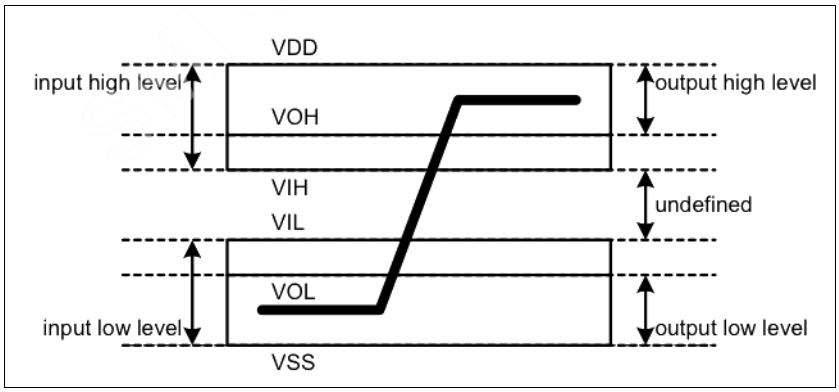

Figure 5: Bus Signal Level

Table 7: Bus Signal Level

Parameter	Symbol	Min.	Max.	Unit	Remark
Output High voltage	V_{OH}	2.4		V	V_{DD} = 3.3V
Output Low voltage	V_{OL}		0.4	V	V_{DD} = 3.3V
Input High voltage	V_{IH}	2	3.6	V	V_{DD} = 3.3V
Input Low voltage	V_{IL}	-0.3	0.8	V	V_{DD} = 3.3V
Output High voltage	V_{OH}	1.6		V	V_{DD} = 1.8V
Output Low voltage	V_{OL}		0.2	V	V_{DD} = 1.8V
Input High voltage	V_{IH}	1.26	2.1	V	V_{DD} = 1.8V
Input Low voltage	V_{IL}	-0.3	0.54	V	V_{DD} = 1.8V

4.4. Bus Timing (High Speed Mode)

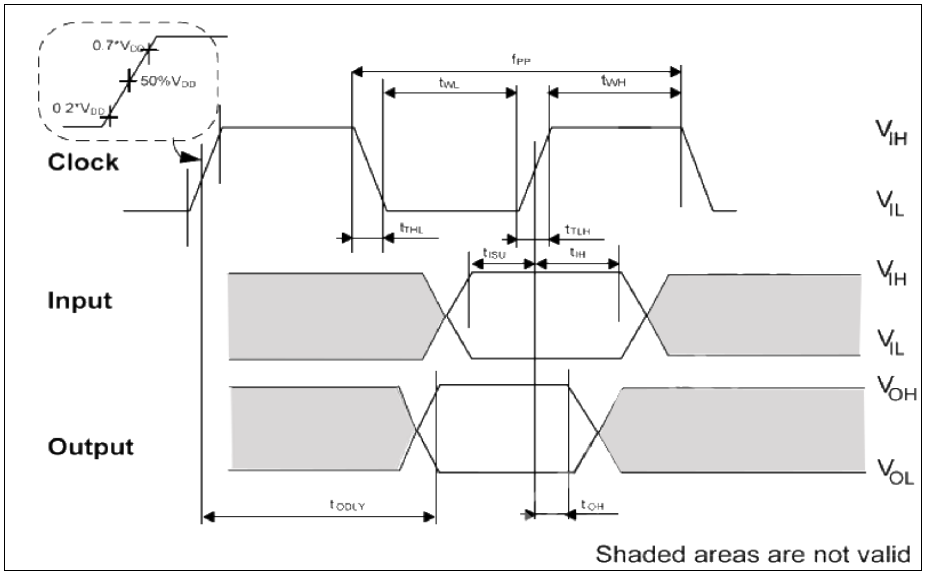

Figure 6: Timing diagram data input/output referenced to clock

Table 8: High Speed Mode Bus Timing

Parameter	Symbol	Min.	Max.	Unit	Remark
Input SDCK					
Clock frequency data transfer mode	f_{PP}	0	50	MHz	C_{CARD} <= 10pF (1 card)
Clock low time / Clock high time	t_{WL} / t_{WH}	7		ns	C_{CARD} <= 10pF (1 card)
Clock rise time / Clock fall time	t_{TLH} / t_{THL}		3	ns	C_{CARD} <= 10pF (1 card)
Input SDD/SDC, reference to SDCK					
Input set-up time	t_{ISU}	6		ns	C_{CARD} <= 10pF (1 card)
Input hold time	t_{IH}	2		ns	C_{CARD} <= 10pF (1 card)
Output SDD/SDC, reference to SDCK					
Output delay time during Data Transfer Mode	t_{ODLY}		14	ns	C_L <= 40pF (1 card)
Output hold time	t_{OH}	2.5		ns	C_L >= 15pF (1 card)
Total System capacitance for each line	C_L		40	pF	

5. Register Table

5.1. Operation Condition Register (OCR)

The 32-bit operation conditions register stores the VDD voltage profile of the card. In addition, this register includes status information bits. One status bit is set if the card power up procedure has been finished. This register includes another status bit indicating the card capacity status after set power up status bit. The OCR register shall be implemented by all cards. As long as the card is busy, the corresponding bit (31) is set to LOW.

Additionally, this register includes 2 more status information bits. Bit 31 – Card power up status bit, this status bit is set if the card power up procedure has been finished. Bit 30 – Card capacity status bit, this status bit is set to 1 if card is High Capacity SD Memory Card. 0 indicates that the card is Standard Capacity SD Memory Card. The Card Capacity status bit is valid after the card power up procedure is completed and the card power up status bit is set to 1. The Host shall read this status bit to identify a Standard or High Capacity SD Memory Card.

Table 9: Innodisk Industrial SD Card OCR Table

OCR bit	VDD voltage window	Value
[6:0]	Reserved	000 0000 b
[7]	1.7V – 1.95V	0 b
[14:8]	2.0V – 2.6V	000 0000 b

[23:15]	2.7V – 3.6V	1 1111 1111 b
[29:24]	Reserved	00 0000 b
[30]	Card capacity status	
[31]	Card power status	

5.2. Card Identification Register (CID)

The Card IDentification (CID) register is 128 bits wide. It contains the card identification information used during the card identification phase. Every individual flash card shall have a unique identification number. The structure of the CID register is defined in the following table.

Table 10: Innodisk Industrial SD Card CID Table

CID bit	Width	Name	Field
[127:120]	8	Manufacturer ID	MID
[119:104]	16	OEM/Application ID	OID
[103:64]	40	Product Name	PNM
[63:56]	8	Product Revision	PRV
[55:24]	32	Product Serial Number	PSN
[23:20]	4	Reserved	---
[19:8]	12	Manufacturing Date	MDT
[7:1]	7	CRC7 check sum	CRC
[0]	1	Not used, always ‘1’	---

5.3. Relative Card Address Register (RCA)

The writable 16-bit relative card address register carries the card address this is published by the card during the card identification. This address is used for the addressed host-card communication after the card identification procedure. The default value of the RCA register is 0x0000. The value 0x0000 is reserved to set all cards into the Stand-by State with CMD7

5.4. Card Specific Data Register (CSD)

The Card-Specific Data register provides information on how to access the card contents. The CSD defines the data format, error correction type, maximum data access time, data transfer speed, whether the DSR register can be used etc. The programmable part of the register can be changed by CMD27.

Table 11: Innodisk Industrial SD Card CSD Table for High Capacity

CSD bit	Width	Name	Field	Value	Note
[127:126]	2	CSD Structure	CSD_STRUCTURE	01 b	v.2.0
[125:120]	6	Reserved	---	---	---
[119:112]	8	Data read access time 1	TAAC	0E h	1ms (*3)
[111:104]	8	Data read access time 2	NSAC	00 h	(*3)
[103:96]	8	Max. data transfer rate	TRAN_SPEED	32 h	25MHz
[95:84]	12	Card command classes	CCC	5F5h	(*1)
[83:80]	4	Max. read data block length	READ_BL_LEN	9 h	512bytes(*3)
[79]	1	Partial block read allowed	READ_BL_PARTIAL	0 b	Not Supported (*3)
[78]	1	Write block misalignment	WRITE_BLK_MISALIGN	0 b	Not Supported (*3)
[77]	1	Read block misalignment	READ_BLK_MISALIGN	0 b	Not Supported (*3)
[76]	1	DSR implemented	DSR_IMP	0 b	Not supported (*3)
[75:70]	6	Reserved	---	000000b	---
[69:48]	22	Device size	C_SIZE	(*2)	(*2)
[47]	1	Reserved	---	0 b	---
[46]	1	Erase single block enable	ERASE_BLK_EN	1 b	Allowed (*3)
[45:39]	7	Erase sector size	SECTOR_SIZE	7Fh	64KB (*3)
[38:32]	7	Write protect group size	WP_GRP_SIZE	00h	(*3)
[31]	1	Write protect group enable	WP_GRP_ENABLE	0 b	Not Supported (*3)
[30:29]	2	Reserved	---	---	---
[28:26]	3	Write speed factor	R2W_FACTOR	010 b	4X (*3)
[25:22]	4	Max. write data block length	WRITE_BL_LEN	9 h	512bytes (*3)
[21]	1	Partial block write allowed	WRITE_BL_PARTIAL	0 b	Not Supported (*3)
[20:16]	5	Reserved	---	---	---
[15]	1	File format group	FILE_FORMAT_GRP	0 b	HD like FAT (*3)
[14]	1	Copy flag	COPY	0 b	Not copied
[13]	1	Permanent write protection	PERM_WRITE_PROTECT	0 b	Not protected
[12]	1	Temporary write protection	TMP_WRITE_PROTECT	0 b	Not protected
[11:10]	2	File format	FILE_FORMAT	00 b	HD like FAT (*3)
[9:8]	2	ECC code	ECC	00 b	None
[7:1]	7	CRC	CRC	---	---
[0]	1	Not used, always ‘1’	---	1 b	---

(*1) Support command class 0,2,4,5,6,7,8,10, including: Basic, Block read/write, Erase, Write protection, Application command, Lock card and switch function. Not support 1,3, including: Stream read/write.

(*2) The value will be changed by different flash memory.
(*3) The field name in parenthesis is set to fixed value and indicates that the host is not necessary to refer these fields. The fixed values enable host, which refers to these fields, to keep compatibility to CSD Version 1.0.

Table 12: Innodisk Industrial SD Card CSD Table for Standard Capacity

CSD bit	Width	Name	Field	Value	Note
[127:126]	2	CSD Structure	CSD_STRUCTURE	00 b	v1.0-v1.1 v2.0 (<= 2GB)
[125:120]	6	Reserved	---	---	---
[119:112]	8	Data read access time 1	TAAC	7F h	80ms
[111:104]	8	Data read access time 2	NSAC	FF h	25.5K clocks
[103:96]	8	Max. data transfer rate	TRAN_SPEED	32 h	25MHz
[95:84]	12	Card command classes	CCC	5F5h	(*1)
[83:80]	4	Max. read data block length	READ_BL_LEN	9 h	512bytes
[79]	1	Partial block read allowed	READ_BL_PARTIAL	1 b	Supported
[78]	1	Write block misalignment	WRITE_BLK_MISALIGN	1 b	Supported
[77]	1	Read block misalignment	READ_BLK_MISALIGN	1 b	Supported
[76]	1	DSR implemented	DSR_IMP	0 b	Not supported
[75:74]	2	Reserved	---	---	---
[73:62]	12	Device size	C_SIZE	(*2)	(*2)
[61:59]	3	Max. R_curr @ V_{DD} min	VDD_R_CURR_MIN	101 b	35mA
[58:56]	3	Max R_curr @ V_{DD} max	VDD_R_CURR_MAX	101 b	45mA
[55:53]	3	Max. W_curr @ V_{DD} min	VDD_W_CURR_MIN	101 b	35mA
[52:50]	3	Max W_curr @ V_{DD} max	VDD_W_CURR_MAX	101 b	45mA
[49:47]	3	Device size multiplier	C_SIZE_MULT	(*2)	(*2)
[46]	1	Erase single block enable	ERASE_BLK_EN	0 b	Not Allowed
[45:39]	7	Erase sector size	SECTOR_SIZE	(*3)	(*3)
[38:32]	7	Write protect group size	WP_GRP_SIZE	(*4)	(*4)
[31]	1	Write protect group enable	WP_GRP_ENABLE	1 b	Supported
[30:29]	2	Reserved	---	---	---
[28:26]	3	Write speed factor	R2W_FACTOR	101 b	32X
[25:22]	4	Max. write data block length	WRITE_BL_LEN	9 h	512bytes
[21]	1	Partial block write allowed	WRITE_BL_PARTIAL	1 b	Supported
[20:16]	5	Reserved	---	---	---
[15]	1	File format group	FILE_FORMAT_GRP	0 b	HD like FAT

[14]	1	Copy flag	COPY	0 b	Not copied
[13]	1	Permanent write protection	PERM_WRITE_PROTE CT	0 b	Not protected
[12]	1	Temporary write protection	TMP_WRITE_PROTEC T	0 b	Not protected
[11:10]	2	File format	FILE_FORMAT	00 b	HD like FAT
[9:8]	2	ECC code	ECC	00 b	None
[7:1]	7	CRC	CRC	---	---
[0]	1	Not used, always '1'	---	1 b	---

(*1) Support command class 0,2,4,5,6,7,8,10, including: Basic, Block read/write, Erase, Write protection, Application command, Lock card and switch function. Not support 1,3, including: Stream read/write.

(*2)~(*4) The value will be changed by different flash memory.

5.5. SD card Configuration Register (SCR)

The CSD register is another configuration register in SD card. SCR provides on SD card's special features that were configured into the given card. The size of SCR is 64 bit. SCR is a read only register.

Table 13: Innodisk Industrial SD Card SCR Table

SCR bit	Width	Name	Field	Value	Note
[63:60]	4	SCR structure	SCR_STRUCTURE	0000 b	v1.0-v2.0
[59:56]	4	SD Card spec. version	SD_SPEC	0010 b	v2.0
[55]	1	Data status after erase	DATA_STAT_AFTER_ ERASE	0 b	Zero after erase
[54:52]	3	SD security support	SD_SECURITY	011 b	Secure-Protocol 2.0
[51:48]	4	DAT bus width support	SD_BUS_WIDTH	0101 b	Support 1 / 4 bits
[47:32]	16	Reserved	---	---	---
[31:0]	32	Reserved	---	---	---

6. Commands

The following table describe in detail all SD Memory Card bus commands.

Table 14: SD Bus Mode Command Table

CMD Index	Abbreviation	Description
CMD0	GO_IDLE_STATE	Resets all cards to idle state
CMD1	Reserved	
CMD2	ALL_SEND_CID	Asks any card to send the CID numbers on the CMD line (any card that is connected to the host will respond)
CMD3	SEND_RELATIVE_ ADDR	Ask the card to publish a new relative address (RCA)
CMD4	SET_DSR	Programs the DSR of all cards
CMD5	Reserved for I/O cards	
CMD6	Reserved	
CMD7	SELECT/DESELECT_CARD	Command toggles a card between the stand-by and transfer states or between the programming and disconnect states. In both cases the card is selected by its own relative address and gets deselected by any other address; address 0 deselects all. In the case that the RCA equals 0, then the host may do one of the following: - use other RCA number to perform card de-selection. - re-send CMD3 to change its RCA number to other than 0 and then use CMD7 with RCA-0 for card de-selection
CMD8	SEND_IF_COND	Send SD Memory Card interface condition, which includes host supply voltage information and asks the card whether card supports voltage. Reserved bits shall be set to '0'
CMD9	SEND_CSD	Addressed card sends its card-specific data (CSD) on the CMD line.
CMD10	SEND_CID	Addressed card sends its card identification (CID) on CMD the line.
CMD11	VOLTAGE_SWITCH	Switch to 1.8V bus signaling level.
CMD12	STOP_ TRANSMISSION	Forces the card to stop transmission
CMD13	SEND_STATUS	Addressed card sends its status register.
CMD14	Reserved	

CMD15	GO_INACTIVE_ STATE	Sends an addressed card into the Inactive State. This command is used when the host explicitly wants to deactivate a card. Reserved bits shall be set to '0'.
CMD16	SET_BLOCKLEN	In the case of a Standard Capacity SD Memory Card, this command sets the block length (in bytes) for all following block commands (read, write, lock). Default block length is fixed to 512 Bytes. Set length is valid for memory access commands only if partial block read operation are allowed in CSD. In the case of SDHC and SDXC Cards, block length set by CMD16 command doesn't affect memory read and write commands. Always 512 Bytes fixed block length is used. This command is effective for LOCK_UNLOCK command.In both cases, if block length is set larger than 512 Bytes, the card sets the BLOCK_LEN_ERROR bit.In DDR50 mode, data is sampled on both edges of the clock. Therefore, block length shall always be even.
CMD17	READ_SINGLE_ BLOCK	In the case of a Standard Capacity SD Memory Card, this command reads a block of the size selected by the SET_BLOCKLEN command. In caes of SDHC and SDXC Cards, block length is fixed 512 Bytes regardless of the SET_BLOCKLEN command.
CMD18	READ_MULTIPLE_ BLOCK	Continuously transfers data blocks from card to host until interrupted by a STOP_TRANSMISSION command. Block length is fixed 512 Bytes regardless of the SET_BLOCKLEN command.
CMD19	SEND_TUNING_BLOCK	64 bytes tuning pattern is sent for SDR50 and SDR104.
CMD20	SPEED_CLASS_CONTROL	Speed Class control command.
CMD21-22	Reserved	
CMD23	SET_BLOCK_COUNT	Specify block count for CMD18 and CMD25.
CMD24	WRITE_BLOCK	In case of SDSC Card, block length is set by the SET_BLOCKLEN command. In case of SDHC and SDXC Cards, block length is fixed 512 Bytes regardless of the SET_BLOCKLEN command.
CMD25	WRITE_MULTIPL E_BLOCK	Continuously writes blocks of data until a STOP_TRANSMISSION follows. Block length is specified the same as WRITE_BLOCK

		command.
CMD26	Reserved For Manufacturer	
CMD27	PROGRAM_CSD	Programming of the programmable bits of the CSD.
CMD28	SET_WRITE_PROT	If the card has write protection features, this command sets the write protection bit of the addressed group. The properties of write protection are coded in the card specific data (WP_GRP_SIZE).SDHC and SDXC Cards do not support this command.
CMD29	CLR_WRITE_PROT	If the card provides write protection features, this command clears the write protection bit of the addressed group. SDHC and SDXC Cards do not support this command.
CMD30	SEND_WRITE_ PROT	If the card provides write protection features, this command asks the card to send the status of the write protection bits. SDHC and SDXC Cards do not support this command.
CMD31	Reserved	
CMD32	ERASE_WR_BLK_START	Sets the address of the first sector to be erased.
CMD33	ERASE_WR_BLK_END	Sets the address of the last sector of the continuous range to be erased.
CMD34-37	Reserved	
CMD38	ERASE	Erases all previously selected write blocks.
CMD39	Reserved	
CMD40	Reserved for Secutiry Specification	
CMD41	Reserved	
CMD42	LOCK_UNLOCK	Used to set/reset the password or lock/unlock the card. The size of the data block is set by the SET_BLOCK_LEN command. Reserved bits in the argument and in Lock Card Data Structure shall be set to 0.
CMD43-51	Reserved	
CMD52-54	Commands for SDIO	
CMD55	APP_CMD	Indicates to the card that the next command is an application specific command rather than a standard command.

CMD56	GEN_CMD	Used either to transfer a data block to the card or to get a data block from the card for general purpose / application specific commands. In case of a SDSC Card, block length is set by the SET_BLOCK_LEN command. In case of SDHC and SDXC Cards, block length is fixed to 512 Bytes. The host sets RD/WR=1 for reading data from the card and sets to 0 for writing data to the card.
CMD57-59	Reserved	
CMD60-63	Reserved For Manufacturer	
Application-specific Commands		
ACMD Index	**Abbreviation**	**Description**
ACMD1-5	Reserved	
ACMD6	SET_BUS_WIDTH	Defines the data bus width ('00'-1bit or '10'=4 bits bus_ to be used for data transfer. The allowed data bus widths are given in SCR register.
ACMD7-12	Reserved	
ACMD13	SD_STATUS	Send the SD Status.
ACMD14-16	Reserved for Security Specification	
ACMD17	Reserved	
ACMD18	Reserved for SD security applications	
ACMD19-21	Reserved	
ACMD22	SEND_NUM_WR_BLOCKS	Send the number of the written (without error) write blocks. Responds with 32bit+CRC data block. If WRITE_BL_PARTIAL='0', the unit of ACMD22 is always 512 byte. If WRITE_BL_PARTIAL='1', the unit of ACMD22 is a block length which was used when the write command was executed.
ACMD23	SET_WR_BLK_ERASE_COUNT	Set the number of write blocks to be pre-erased before writing (to be used for faster Multiple Block WR command). "1"=default (one wr block).
ACMD24	Reserved	
ACMD25-28	Reserved for SD security applications	
ACMD29	Reserved	
ACMD30-35	Reserved for Security Specification	
ACMD36-37	Reserved	
ACMD38	Reserved for SD security applications	
ACMD39-40	Reserved	

ACMD41	SD_SEND_OP_COND	Sends host capacity support information (HCS) and asks the accessed card to send its operating confition register (OCR) content in the response on the CMD line. HCS is effective when card receives SEND_IF_COND command. Sends request to switch to 1.8V signaling (S18R). Reserved bit shall be set to '0'. CCS bit is assigned to OCR[30]. XPC controls the maximum current in the default speed mode of SDXC card. XPC=0 means 100mA (max.) but speed class is not supported. XPC=1 means 150mA (max.) and speed class is supported.
ACMD42	SET_CLR_CARD_DETECT	Connect[1]/Disconnect[0] the 50 Kohm pull-up resistor on CD/DAT3 (pin 1) of the card.
ACMD43-49	Reserved for SD security applications	
ACMD50	Reserved	
ACMD51	SEND_SCR	Reads the SD Configuration Register (SCR).
ACMD52-54	Reserved for Security Specification	
ACMD55	Not exist	Equivalent to CMD55.
ACMD56-59	Reserved for Security Specification	

7. Part Number Rule

CODE	1	2	3	4	5	6	7	8	9	10	11	12	13	14	15	16	17	18
	D	**S**	**2**	**A**	**-**	**0**	**8**	**G**	**I**	**8**	**1**	**W**	**1**	**B**				
Description	Disk	Industrial SD Card			-	Capacity			Category			Operation Temp.	Internal Control	Flash Type	-	Customized Code		

Definition	
Code 1st (Disk)	**Code 9th ~11th (Category)**
D : Disk	I81: Industrial SD Card
Code 2nd ~ 4th (Form Factor)	**Code 12th (Operation Temperature)**
S2A: Industrial SD Card	C: Standard Grade (0℃~ +70℃)
Code 6th ~8th (Capacity)	W: Industrial Grade (-40℃~ +85℃)
128: 128MB 256: 256MB	**Code 13th (Internal control)**
512: 512MB 01G: 1GB	**Code 14th (Flash Type)**
02G: 2GB 04G: 4GB	B: Toshiba SLC
08G: 8GB 16G: 16GB 32G: 32GB	