# NU 308 ECJ

Popular item
SKF Explorer

## Dimensions

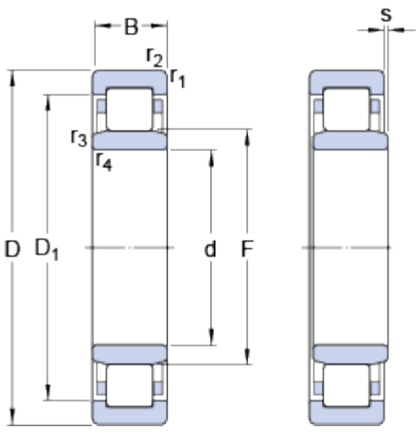


| | | | |
|---|---|---|---|
| d | | 40 | mm |
| D | | 90 | mm |
| B | | 23 | mm |
| $D_1$ | ≈ | 75.18 | mm |
| F | | 52 | mm |
| $r_{1,2}$ | min. | 1.5 | mm |
| $r_{3,4}$ | min. | 1.5 | mm |
| s | max. | 1.4 | mm |

## Abutment dimensions

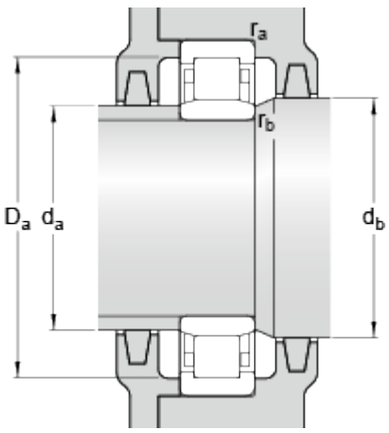


| | | | |
|---|---|---|---|
| $d_a$ | min. | 48 | mm |
| $d_a$ | max. | 50 | mm |
| $d_b$ | min. | 54 | mm |
| $D_a$ | max. | 81.8 | mm |
| $r_a$ | max. | 1.5 | mm |
| $r_b$ | max. | 1.5 | mm |

## Calculation data

| | | | |
|---|---|---|---|
| Basic dynamic load rating | C | 93 | kN |
| Basic static load rating | $C_0$ | 78 | kN |
| Fatigue load limit | $P_u$ | 10.2 | kN |
| Reference speed | | 8000 | r/min |
| Limiting speed | | 9500 | r/min |
| Calculation factor | $k_r$ | 0.15 | |
| Limiting value | e | 0.2 | |
| Axial load factor | Y | 0.6 | |

## Mass

| | | |
|---|---|---|
| Mass bearing | 0.67 | kg |

## Associated products

| | |
|---|---|
| Angle ring | HJ 308 EC |