# DATASHEET



## PS116-Z12-LR200-K240

- Pre-wired cable right, 2 m
- Snap action 1 Normally open contact (NO) / 2 Opener (NC)
- Quick connection technology as connection terminals rotated by 45°
- cable entry 1 x M20 x 1,5
- Thermoplastic enclosure
- Symmetric enclosure
- Protection class IP66, IP67
- Actuator heads can be repositioned by 8 x 45°

## Data

### Ordering data

| | |
|---|---|
| Product type description | PS116-Z12-LR200-K240 |
| Article number (order number) | 103006592 |
| EAN (European Article Number) | 4030661442419 |
| eCl@ss number, version 12.0 | 27-27-26-01 |
| eCl@ss number, version 11.0 | 27-27-26-01 |
| eCl@ss number, version 9.0 | 27-27-26-01 |
| ETIM number, version 7.0 | EC000030 |
| ETIM number, version 6.0 | EC000030 |

### Approvals - Standards

| | |
|---|---|
| Certificates | cULus<br>CCC |

### General data

| | |
|---|---|
| Standards | EN IEC 60947-5-1 |
| Housing construction form | Norm construction design |
| Actuator type to EN 50047 | e |
| Housing material | Plastic, glass-fibre reinforced thermoplastic, zinc die-cast, chromated |
| Active area | Metal film |
| Gross weight | 150 g |

## General data - Features

| | |
|---|---|
| Safety functions | Yes |
| Number of auxiliary contacts | 1 |
| Number of safety contacts | 2 |

### Safety classification

| | |
|---|---|
| Standards | EN ISO 13849-1 |
| $B_{10D}$ Normally-closed contact (NC) | 20,000,000 Operations |
| $B_{10D}$ Normally-open contact (NO) | 1,000,000 Operations |
| Note | at 10% $I_e$ and ohmic load |
| Mission time | 20 Year(s) |

## Mechanical data

| | |
|---|---|
| Actuating element | Angle roller lever K240 |
| Roller material | Plastic |
| Mechanical life, minimum | 10,000,000 Operations |
| Actuating force, minimum | 6 N |
| Positive break force, minimum | 40 N |
| Actuating speed, minimum | 10 mm/min |
| Actuating speed, maximum | 1 m/s |
| Actuating torque, minimum | 0.2 Nm |
| Positive break torque | 0.6 Nm |

## Mechanical data - Connection technique

| | |
|---|---|
| Length of cable | 2 m |
| Termination | Pre-wired cable<br>Cable, 6-pole |
| Wire cross-section | 0.5 $mm^2$ |
| Cable type | LiYY |
| Terminal (mechanical) | right |

## Mechanical data - Dimensions

| | |
|---|---|
| Length of sensor | 16.6 mm |
| Width of sensor | 31 mm |
| Height of sensor | 95.5 mm |
| Diameter of Castor | 22 mm |

## Ambient conditions

| | |
|---|---|
| Degree of protection | IP66<br>IP67 |
| Ambient temperature | -30 ... +80 °C |
| Protection class | II |

## Ambient conditions - Insulation values

| | |
|---|---|
| Rated insulation voltage $U_i$ | 300 V |
| Rated impulse withstand voltage $U_{imp}$ | 4 kV |
| Degree of pollution | 3 |

## Electrical data

| | |
|---|---|
| Required rated short-circuit current | 400 A |
| Utilisation category AC-15 | 240 VAC |
| Utilisation category AC-15 | 3 A |
| Utilisation category DC-13 | 24 VDC |

| | |
|---|---|
| Utilisation category DC-13 | 1.5 A |
| Switching element | 1 NO contact, 2 NC contacts |
| Switching principle | Snap action |
| Bounce duration, maximum | 3 ms |
| Maximum switching frequency | 5,000 /h |
| Switchover time, maximum | 5.5 ms |
| Material of the contacts, electrical | Silver |

## Ordering code

Product type description:
PS116-(1)-(2)-(3)-(4)

(1)

| | |
|---|---|
| **Z11** | Snap action 1 NO contact / 1 NC contact |
| **Z02** | Snap action 2 NC contacts |
| **Z12** | Snap action 1 NO contact / 2 NC contact |
| **Z11R** | Snap action 1 NO contact / 1 NC contact with latching |
| **Z02R** | Snap action 2 NC contacts with latching |
| **Z12R** | Snap action 1 NO contact / 2 NC contact with latching |
| **T11** | Slow action 1 NO contact / 1 NC contact |
| **T02** | Slow action 2 NC contacts |
| **T20** | Slow action 2 NO contact |
| **T12** | Slow action 1 NO contact / 2 NC contact |
| **T21** | Slow action 2 NO contact / 1 NC contact |
| **T03** | Slow action 3 NC contacts |
| **T11UE** | Slow action 1 NO contact / 1 NC contact with overlapping contacts |
| **T02H** | Slow action 2 NC contacts with staggered contacts |

(2)

| | |
|---|---|
| **L200** | Connecting cable bottom, cable length 2 m |
| **LR200** | Connecting cable right, cable length 2 m |
| **LR300** | Connecting cable right, cable length 3 m |

| | |
|---|---|
| **LR500** | Connecting cable right, cable length 5 m |
| **ST** | Connector plug M12 - plastic - bottom |
| **STR** | Connector plug M12, right |

(3)

| | |
|---|---|
| **S200** | plunger S200 Ø 6 mm |
| **R200** | Roller plunger R200 |
| **K200** | Offset roller lever - plastic roller- width 5.3 mm - Ø 12 mm |
| **K210** | Offset roller lever - plastic roller- width 5mm - Ø 14mm |
| **K230** | Angle roller lever - plastic roller Ø 14 mm |
| **K240** | Angle roller lever with plastic roller Ø 22 mm - right-bent |
| **K250** | Angle roller lever with plastic roller Ø 22 mm - left-bent |
| **H200** | Roller lever - plastic roller Ø 16 m - lever length 24 mm |
| **N200** | Roller lever 2 mm Toothing (24...26mm) - Plastic roller Ø 20 mm - Width 9.8 mm |
| **J200** | Rod lever - plastic - 200mm -Ø 6mm |

(4)

| | |
|---|---|
| **0** | Material Castor/Lever: Plastic |
| **1** | Material Castor/Lever: Stainless steel |
| **2** | Material Castor/Lever: Brass |
| **3** | Material Castor/Lever: Aluminium |
| **4** | Material Castor/Lever: Steel |

## Pictures

### Product picture (catalogue individual photo)




ID: kps1kf22
| 264.4 kB | .jpg | 352.778 x 297.744 mm - 1000 x 844 px - 72 dpi
| 18.6 kB | .png | 74.083 x 62.442 mm - 210 x 177 px - 72 dpi
| 32.9 kB | .jpg | 123.472 x 104.069 mm - 350 x 295 px - 72 dpi

## Dimensional drawing basic component

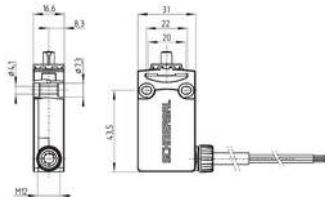

ID: kps11g04
| 246.1 kB | .ai | 200 x 200 mm - 566 x 566 px - 72 dpi
| 4.0 kB | .png | 74.083 x 44.803 mm - 210 x 127 px - 72 dpi
| 98.3 kB | .jpg | 352.778 x 214.136 mm - 1000 x 607 px - 72 dpi

## Dimensional drawing actuator

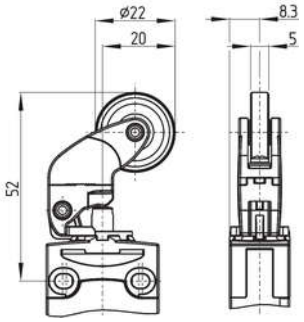


ID: kps11b07
| 410.7 kB | .ai | 110.124 x 108.395 mm - 312 x 307 px - 72 dpi
| 5.6 kB | .png | 74.083 x 73.025 mm - 210 x 207 px - 72 dpi
| 221.1 kB | .jpg | 352.778 x 376.767 mm - 1000 x 1068 px - 72 dpi

## Switch travel diagram

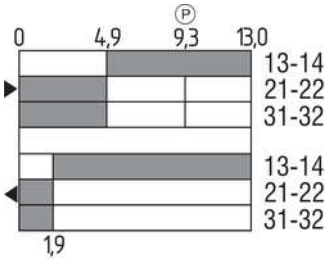


ID: kps11s39
| 2.7 kB | .png | 74.083 x 58.914 mm - 210 x 167 px - 72 dpi
| 106.5 kB | .jpg | 352.778 x 280.458 mm - 1000 x 795 px - 72 dpi

## Diagram

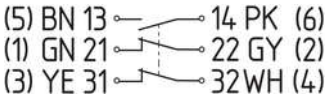


ID: kps16k03
| 85.8 kB | .jpg | 352.778 x 97.367 mm - 1000 x 276 px - 72 dpi
| 4.0 kB | .png | 74.083 x 20.461 mm - 210 x 58 px - 72 dpi