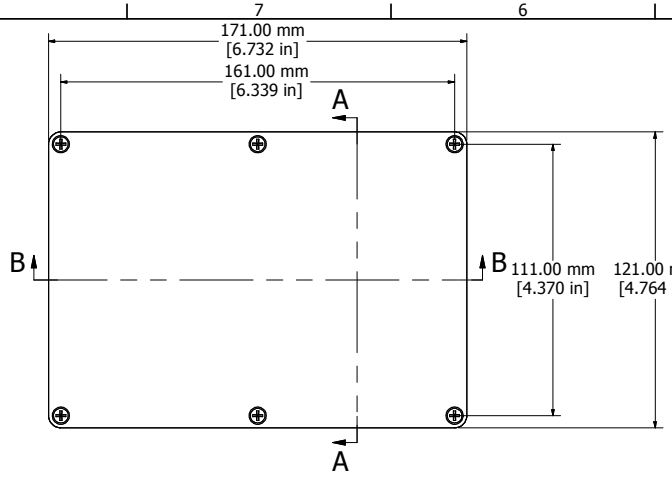


Top View of Assembly

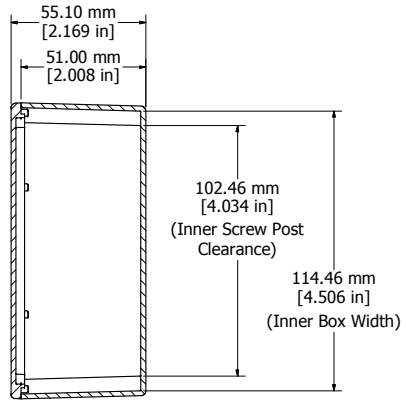


SECTION A-A
End View of Assembly

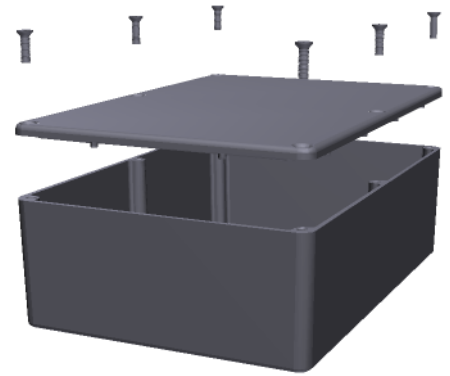

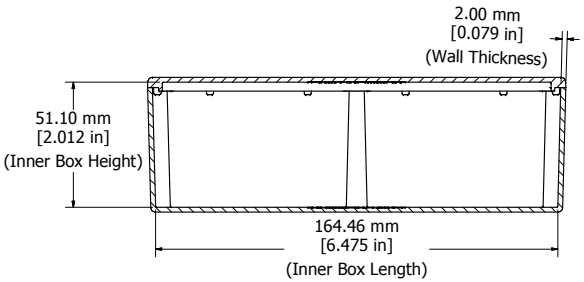


SECTION B-B
Side View of Assembly

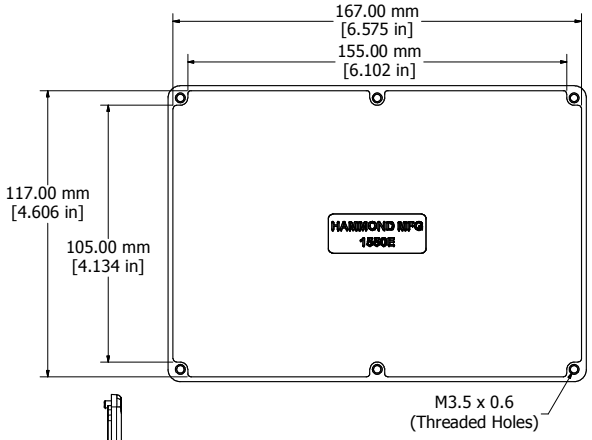


Top View Looking Inside Box

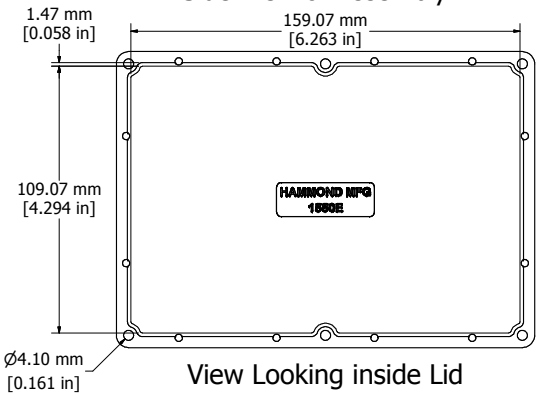


View Looking inside Lid

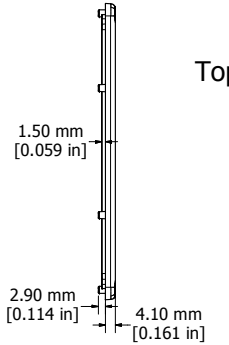


Enclosures can be Factory Modified ( Milling, Drilling, Printing etc. )
Contact Factory mjm@hammondmfg.com for quotes
Solid models of this enclosure available in STEP or IGES.

| NOTE |
|---|
| Purchased assembly includes box, lid, and 6 cover screws.<br>Box and lid are made from Diecast Aluminum Alloy.<br>EVA Foam Gasket supplied with Liquid Resistant Enclosures |

| PART NUMBERS | |
|---|---|
| **1550E Enclosure** | |
| Unfinished | 1550E |
| Black Textured Polyester Powder Paint | 1550EBK |
| **1550WE Liquid Resistant Enclosure (Silicon Factory Installed Gasket)** | |
| Unfinished | 1550WE |
| Black Textured Polyester Powder Paint | 1550WEBK |
| **Accessories** | |
| **Recommended Torque: 75 ozf.in / 55 cN.m** | |
| Unfinished Cover Screws (Pkg 100) [M3.5 x 0.6 18-8 SS] | 1550MS100 |
| Black Cover Screws (Pkg 100) [M3.5 x 0.6 18-8 SS] | 1550MS100BK |

HAMMOND MANUFACTURING™

1550E

www.hammondmfg.com