Nexus 105 Sounder Beacon (DC)

The Nexus 105 is a high output, low current consumption sounder beacon designed for industrial applications. Connections are made to the base during the initial wiring phase which results in faster and more reliable installation. In addition, the head is fixed by quarter turn fasteners avoiding the need to screw up four individual screws thus enabling faster installation and accurate seal compression for weatherproofing.

The combination of a powerful sounder and high output LED beacon ensures a very effective audio-visual signal. 110dB and 120dB units, as well as AC variants, are also available.

Features

- **High sound output: 113dB (max); 105dB (typical)**
- **High output LED beacon**
- **Quarter turn fasteners for ease of installation**
- **First-fix, wire to base technology**
- **IP66 rated**
- **Three alarm stages**
- **Low in-rush current**
- **Static/flashing mode**
- **Volume control for greater flexibility - 20dB**
- **64 tones**
- **Separate connections for sounder & beacon**

Lens Colour Options





Applications - Conveyors, Process control alarm, Cranes, Moving machinery, Safety signalling

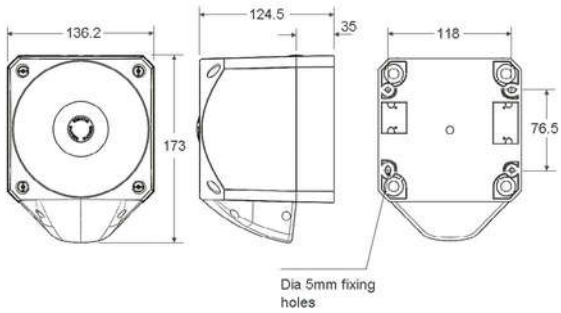

Specifications

Part No.	Lens Colour	Beacon Type	Audibility at 1m	Tones	Voltage	Sounder Current	Beacon Current @24V
PNC-0201	Red Beacon	LED Beacon	Up to 113dB (A)	64	10-60V DC	8-40mA	55mA
PNC-0202	Amber Beacon	LED Beacon	Up to 113dB (A)	64	10-60V DC	8-40mA	55mA
PNC-0203	Clear Beacon	LED Beacon	Up to 113dB (A)	64	10-60V DC	8-40mA	55mA
PNC-0204	Blue Beacon	LED Beacon	Up to 113dB (A)	64	10-60V DC	8-40mA	55mA
PNC-0205	Green Beacon	LED Beacon	Up to 113dB (A)	64	10-60V DC	8-40mA	55mA

IP Rating: IP66 **Operating Temp:** -25°C to +65°C **Cable Entries:** 5
Weight: 0.8kg **Compliance:** EN54-3 Type

klaxon