Product data sheet
Characteristics

XCPR2121P20
limit switch XCPR - th.plastic roller lever plung. Hor - 1NC+1NO - snap - M20



Main

Range of product	OsiSense XC
Series name	Standard format
Product or component type	Limit switch
Device short name	XCPR
Sensor design	Compact
Reset	With
Body type	Fixed
Head type	Plunger head
Material	Plastic
Body material	Plastic
Head material	Zamak
Fixing mode	By the body
Movement of operating head	Linear
Type of operator	Spring return roller lever plunger thermoplastic
Type of approach	Lateral approach 1 direction
Cable entry	1 entry tapped for M20 x 1.5 cable gland, cable outer diameter: 7...13 mm
Number of poles	2
Contacts type and composition	1 NC + 1 NO
Contact operation	Snap action

Complementary

Switch actuation	By 30° cam
Electrical connection	Screw-clamp terminals, clamping capacity: 1 x 0.34...2 x 1.5 mm²
Contacts insulation form	Zb
Positive opening	With
Positive opening minimum force	18 N
Minimum force for tripping	6 N

Disclaimer: This documentation is not intended as a substitute for and is not to be used for determining suitability or reliability of these products for specific user applications

Maximum actuation speed	1 m/s
Contact code designation	A300, AC-15 (Ue = 240 V, Ie = 3 A) , Ithe = 10 A conforming to EN/IEC 60947-5-1 appendix A Q300, DC-13 (Ue = 250 V, Ie = 0.27 A) conforming to EN/IEC 60947-5-1 appendix A
[Ui] rated insulation voltage	300 V conforming to CSA C22.2 No 14 500 V degree of pollution 3 conforming to EN 60947-1 500 V degree of pollution 3 conforming to IEC 60947-1 300 V conforming to UL 508
Resistance across terminals	<= 25 MOhm conforming to IEC 60255-7 category 3
[Uimp] rated impulse withstand voltage	6 kV conforming to IEC 60664 6 kV conforming to IEC 60947-1
Short-circuit protection	10 A by gG cartridge fuse
Electrical durability	5000000 cycles DC-13 120 V 4 W <= 60 cyc/mn 0.5 IEC 60947-5-1 appendix C 5000000 cycles DC-13 24 V 10 W <= 60 cyc/mn 0.5 IEC 60947-5-1 appendix C 5000000 cycles DC-13 48 V 7 W <= 60 cyc/mn 0.5 IEC 60947-5-1 appendix C
Width	31 mm
Height	65 mm
Depth	30 mm
Product weight	0.125 kg
Terminals description ISO n°1	(13-14)NO (21-22)NC

Environment

Shock resistance	50 gn (duration = 11 ms) conforming to IEC 60068-2-27
Vibration resistance	25 gn (f = 10...500 Hz) conforming to IEC 60068-2-6
IP degree of protection	IP66 conforming to IEC 60529 IP67 conforming to IEC 60529
IK degree of protection	IK04 conforming to EN 50102
Overvoltage category	Class II conforming to IEC 61140 Class II conforming to NF C 20-030
Ambient air temperature for operation	-25...70 °C
Ambient air temperature for storage	-40...70 °C
Protective treatment	TC
Product certifications	CSA UL
Standards	EN 60204-1 EN 60947-5-1 IEC 60204-1 IEC 60947-5-1 UL 508 CSA C22.2 No 14

Offer Sustainability

Sustainable offer status	Green Premium product
RoHS (date code: YYWW)	Compliant - since 1037 - Schneider Electric declaration of conformity Schneider Electric declaration of conformity
REACh	Reference not containing SVHC above the threshold Reference not containing SVHC above the threshold

Contractual warranty

Warranty period	18 months

Dimensions

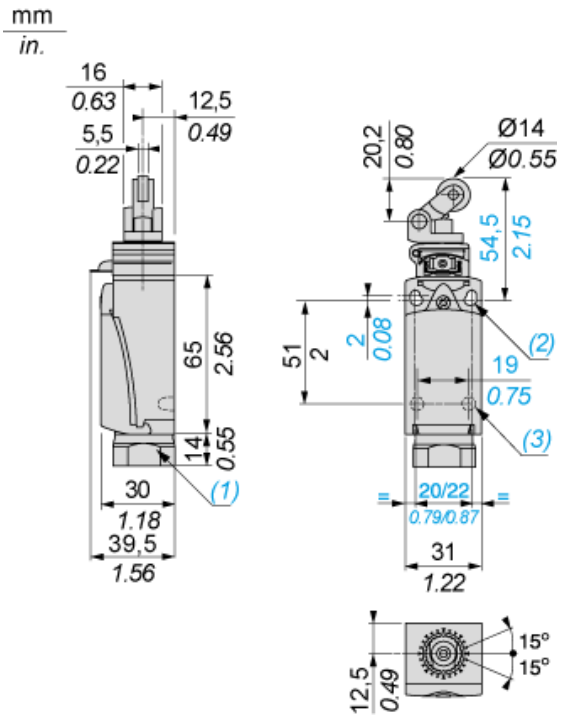

(1) Tapped entry for M20 x 1.5
(2) 2 elongated holes Ø 4.3 x 6.3 mm on 22 mm centres, 2 holes Ø 4.3 on 20 mm centres.
(3) 2 x Ø 3 holes for support studs, depth 4 mm

Mounting with Cable Entry

Position of Cable Gland

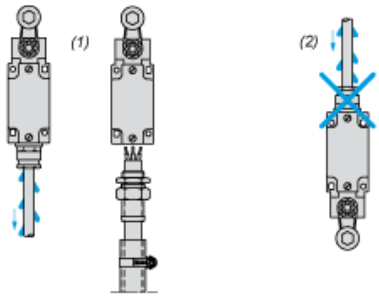

(1) Recommended
(2) To be avoided

Wiring Diagrams

2-pole NC + NO Snap Action



Characteristics of Actuation

Switch Actuation by 30° Cam

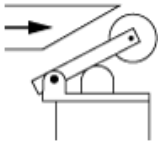

Functionnal Diagram

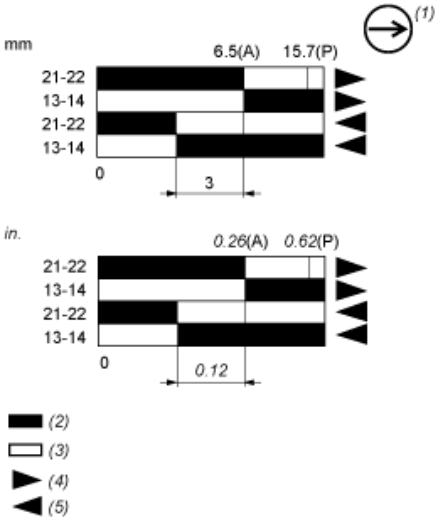

(P) Positive opening point
(A) Cam displacement
(1) NC contact with positive opening operation
(2) Closed
(3) Open
(4) Tripping
(5) Resetting