SKINDICHT® SKZ

SKINDICHT® SKZ, PG brass cable gland with incised sealing ring, high mechanical stability and strain relief, for harsh conditions





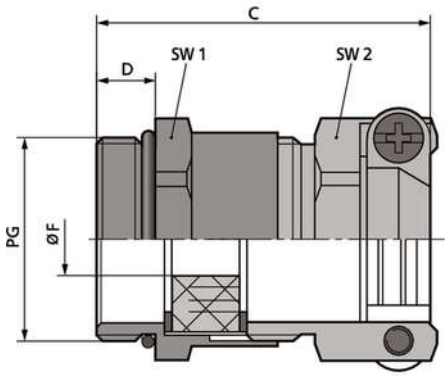

CE

Robust

Optimum strain relief

Wide clamping range

Benefits

With incised sealing ring for adjustment to several cable diameters
High strain relief
High mechanical stability

Application range

Saddle clamp strain relief gland for harsh application conditions.
Building sites
Plant engineering
Electric motor manufacturing

Product Make-up

PG connection thread

Note

SKINDICHT® SKZ-XL is similar to the SKINDICHT® SKZ, but has an extended connection thread for thick walls
Counter nut to be used: SKINDICHT® SM
Refer to SKINDICHT® EV for additional accessories

Last Update (06.07.2017)
©2017 Lapp Group - Technical changes reserved
Product Management www.lappkabel.de
You can find the current technical data in the corresponding data sheet.
PN 0456 / 02_03.16

SKINDICHT® SKZ

Technical Data

Classification:	ETIM 5.0 Class-ID: EC000441 ETIM 5.0 Class-Description: Cable screw gland
Caution:	The installation dimensions can be found in appendix T21
Material:	Body: nickel-plated brass Incised sealing ring: CR O-ring: NBR
Protection rating:	IP 55
Temperature range:	-30°C to +80°C

Note

Photographs are not to scale and do not represent detailed images of the respective products.
Prices are net prices without VAT and surcharges. Sale to business customers only.

Last Update (06.07.2017)
©2017 Lapp Group - Technical changes reserved
Product Management www.lappkabel.de
You can find the current technical data in the corresponding data sheet.
PN 0456 / 02_03.16

SKINDICHT® SKZ

Article number	Article designation / size	Clamping range ØF (mm)	Max. fitting size for installation (mm)	SW1/SW2 mm	Overall length, C (mm)	Thread length, D (mm)
SKINDICHT® SKZ						
52004280	PG 9	6 - 8.5	24	17 / 17	30	6
52004290	PG 11	8 - 12	27	20 / 21	30	6
52004300	PG 13,5	12 - 14	30	22 / 22	34	6.5
52004310	PG 16	13 - 16	33	24 / 24	35	6.5
52004320	PG 21	15 - 21	42	30 / 30	41	7
52005570	PG 29	20 - 29	58	40 / 41	46	8
SKINDICHT® SKZ-XL						
52005575	PG 9	6 - 8.5	24	17 / 17	39	15
52005576	PG 11	8 - 12	27	20 / 21	39	15
52005577	PG 13,5	12 - 14	30	22 / 22	42.5	15
54000043	PG 16	13 - 16	33	24 / 24	43.5	15
54000011	PG 21	15 - 21	42	30 / 30	49	15
54000098	PG 29	20 - 27.5	58	40 / 41	53	15

Last Update (06.07.2017)
©2017 Lapp Group - Technical changes reserved
Product Management www.lappkabel.de
You can find the current technical data in the corresponding data sheet.
PN 0456 / 02_03.16