Product datasheet
Characteristics

XC2JC10151
limit switch XC2-J - steel square rod lever - 1 C/O



Main

Range of product	OsiSense XC
Series name	Special format
Product or component type	Limit switch
Product specific application	For severe applications
Device short name	XC2J
Body type	Fixed
Head type	Rotary head
Material	Metal
Movement of operating head	Rotary
Type of operator	Square rod lever steel square rod 3 mm, L = 125 mm
Switch actuation	By any moving part
Type of approach	Lateral approach, 2 directions
Number of poles	1
Contact operation	Snap action
Minimum torque for tripping	0.2 N.m
Maximum actuation speed	1.5 m/s

Complementary

Fixing mode	By the body
Electrical connection	Screw-clamp terminals, clamping capacity: 1 x 0.5...2 x 2.5 mm²
Cable entry	1 entry incorporating cable gland, cable outer diameter: 6…13.5 mm
Contacts insulation form	Za
Contacts material	Silver plated contacts
Positive opening	Without
Minimum actuation speed	0.001 m/min
Contact code designation	A300, AC-15 (Ue = 240 V), Ie = 3 A, Ithe = 10 A conforming to EN/IEC 60947-5-1 Q300, DC-13 (Ue = 250 V), Ie = 0.27 A conforming to EN/IEC 60947-5-1
[Ui] rated insulation voltage	500 V conforming to IEC 60947-5-1

Disclaimer: This documentation is not intended as a substitute for and is not to be used for determining suitability or reliability of these products for specific user applications

	500 V conforming to NF C 20-040 group C 300 V conforming to CSA C22.2 No 14
Maximum resistance across terminals	25 MOhm conforming to IEC 60255-7 category 3 25 MOhm conforming to NF C 93-050 method A
Short-circuit protection	10 A cartridge fuse, type gG
Electrical durability	5000000 cycles, DC-13, 120 V, 4 W, operating rate <3600 cyc/h, load factor: 0.5 conforming to IEC 60947-5-1 appendix C 5000000 cycles, DC-13, 24 V, 10 W, operating rate <3600 cyc/h, load factor: 0.5 conforming to IEC 60947-5-1 appendix C 5000000 cycles, DC-13, 48 V, 7 W, operating rate <3600 cyc/h, load factor: 0.5 conforming to IEC 60947-5-1 appendix C
Mechanical durability	30000000 cycles
Width	40 mm
Height	141 mm
Depth	65 mm
Net weight	0.605 kg
Terminals description ISO n°1	(13-14-11-12)OF

Environment

Shock resistance	25 gn for 18 ms conforming to IEC 60068-2-27
Vibration resistance	10 gn (f= 10…500 Hz) conforming to IEC 60068-2-6
IP degree of protection	IP65 conforming to IEC 60529 IP657 conforming to NF C 20-010
IK degree of protection	IK08
Electrical shock protection class	Class I conforming to IEC 60536 Class I conforming to NF C 20-030
Ambient air temperature for operation	-25…70 °C
Ambient air temperature for storage	-40…70 °C
Protective treatment	TC
Product certifications	DEMKO NEMKO CSA
Standards	VDE 0660-200 UL 508 IEC 60337-1 CSA C22.2 No 14 EN/IEC 60947-5-1

Packing Units

Package 1 Weight	631 g
Package 2 Weight	4.646 kg

Offer Sustainability

Sustainable offer status	Green Premium product
EU RoHS Directive	Pro-active compliance (Product out of EU RoHS legal scope) EU RoHS Declaration
Mercury free	Yes
RoHS exemption information	Yes
Environmental Disclosure	Product Environmental Profile

Contractual warranty

Warranty	18 months

Dimensions

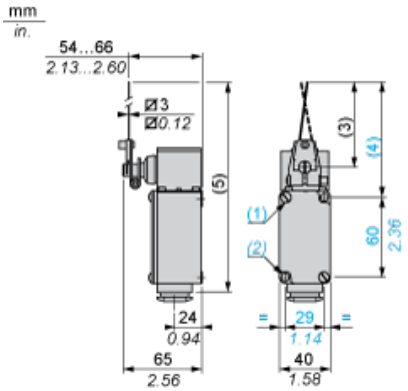

(1) Fixing from the rear: by 2 M5 screws. Depth of thread on switch: 10 mm.
(2) Fixing from the front via 2 holes Ø 5.5.
(3) 125 max.
(4) 148 max.
(5) 222 max.

Wiring Diagram

Single-pole CO Snap Action

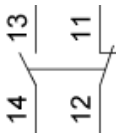

Characteristics of Actuation

Switch Actuation by Any Moving Part

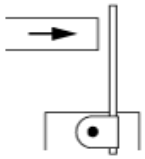

Functionnal Diagram

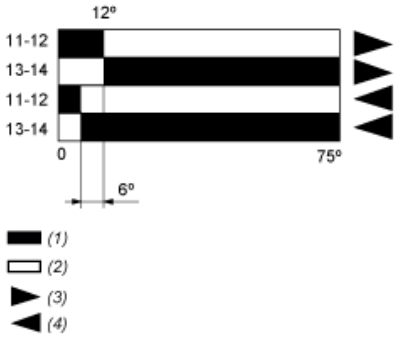

(1) Closed
(2) Open
(3) Tripping
(4) Resetting