Plastic bodied limit switch
Series C2

Description **C2-A2Z**	Article number **6008801003**

Operating symbol

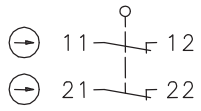

Operating diagram

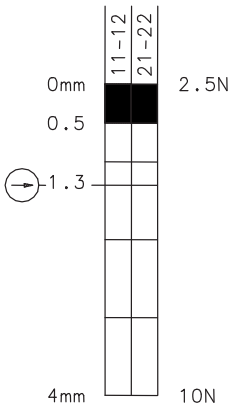

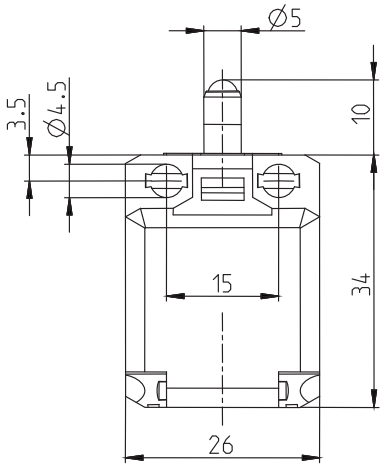

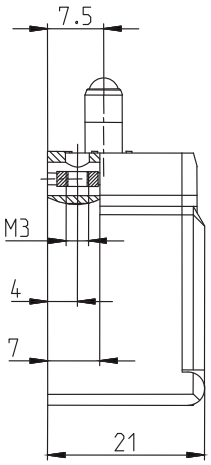

On Off

Tolerance:
Operating point ± 0,25 mm;
Operating force ± 10 %

Electrical Data		
Rated insulation voltage	U_i	250 V AC
Conv. thermal current	I_{the}	10 A
Rated operational voltage	U_e	240 V
Utilization category		AC-15, U_e/I_e 240 V / 3 A
Direct opening action	⊖	acc. to IEC/EN 60947-5-1, Annex K
Short-circuit protective device		Fuse 6 A gG
Protection class		II, totally insulated

Mechanical data	
Enclosure	Thermoplastic, glass fibre reinforced (UL 94-V0)
Cover	Thermoplastic
Actuator	Plunger (st)
Ambient air temperature	-30 °C ... +80 °C
Contact type	2 NC (Zb)
Mechanical life	3 x 10^6 operating cycles
Switching frequency	≤ 100 / min.
Assembly	from the top 2 x M4, from the front 2 x M3
Connection	4 screw connections (M3,5)
Conductor cross-sections	Solid: 0,5 ... 1,5 mm^2 or Litz wire with ferrules: 0,5 ... 1,5 mm^2
Cable entrance	Rectangle 8,5 x 3,5 mm
Weight	≈ 0,02 kg
Installation position	operator definable
Protection type	IP20 nach EN 60529; DIN VDE 0470 T1 IP30 bei voller Kontaktbelegung, mit Litzen deren Außendurchmesser ≥ 2,2 beträgt.

Actuation
The push bolt actuator is mainly intended to be actuated along its axis. Side actuation will considerably reduce switch life. The switch may not be used as a mechanical stop.

ID for safety engineering	
B10d	6 x 10^6 cycles

Standards
VDE 0660 T100, DIN EN 60947-1, IEC 60947-1
VDE 0660 T200, DIN EN 60947-5-1, IEC 60947-5-1
DIN EN ISO 13849-1

EU Conformity
acc. to directive 2014/35/EU

Approvals
$_{C}CSA_{US}$, UL
CCC

Notes
The specified protection classification (IP code) applies only when the cover is closed.