New!

A02ES-H series

High-security emergency stop switches

Distinctive features and specifications



- ❑ **Approved to EN 60947-5-5, EN60547-5-1, UL 508 and CSA**
- ❑ **Pull or twist to release**
- ❑ **AC-12, 3A 240VAC / DC-12, 2A 30V**
- ❑ **Panel sealed to IP65**
- ❑ **Built-in-safety**

The A02ES-H series has been designed to ensure the highest security level. By design, this product has a failsafe modular construction.
Many other emergency stop switches are not failsafe and rely on butt action contacts: the NC contats remain closed until the actuator is pressed. Therefore, if the switch is damaged, destroyed or assembled incorrectly, the contacts remain closed.
On the A02ES-H, if the operator or switch block become separated, the circuit will open.

ELECTRICAL SPECIFICATIONS

- Electrical function : push to shut off, pull or twist to release
- Current/voltage rating - NC contacts :
  AC-12, 3A 250VAC
  AC-15, 1,5A 250VAC
  DC-12, 2A 30V
  DC-13, 1A 30V
- Current/voltage rating - NO contacts :
  AC12, 0,6A 250VAC
  AC14, 0,3A 250VAC
  DC12, 2A 30V / 1A 30V
- Electrical life : 100.000 cycles
- Insulation resistance : 100 MΩ min.
- Dielectric strength : contact block 2.500 Vrms
- Contacts : gold plated silver

ENVIRONMENTAL SPECIFICATIONS

- Front panel sealing : IP65
- Terminals IP20 (finger safe)
- Operating temperature : -25°C to +60°C
- Storage temperature : -45°C to +80°C

PANEL CUT-OUT

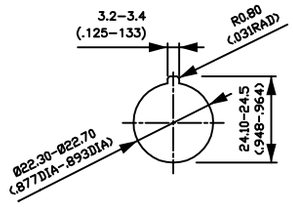

GENERAL SPECIFICATIONS

- Panel thickness : 6 mm (.236) max.
- Low level or mechanical life : 250.000 cycles
- Recommended torque : 2Nm
- Switch terminals : M3 screws

OPERATING FORCE

- Push to shut off : 32N
- Pull to release : 21N
- Turn to release : 0,27Nm
- Minimum force to direct opening action : 80N

AGENCY APPROVALS

UL 508
UL 991

CSA 22.2 No 14

EN 60947-5-5
EN 60547-5-1

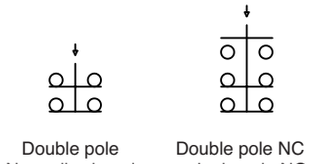

Mounting accessories : Standard hardware supplied : 1 nut and 1 flat panel seal

Packaging unit : box of 1 piece with instruction sheet. *Instruction sheet also available on request.*

The company reserves the right to change specifications without notice - Not for sale in JAPAN.

A02ES-H series New!

High-security emergency stop switches

Panel cut-out Ø 22 (.866)

Double pole, normally closed



A02ESH3B102IX0

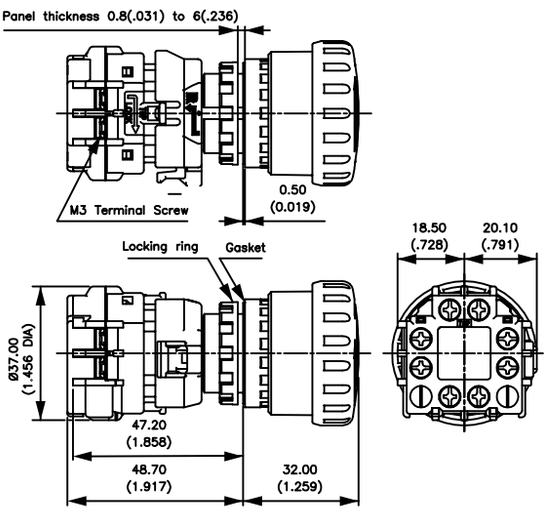

Double pole, normally closed + Single pole, normally open



A02ESH3B112IX0

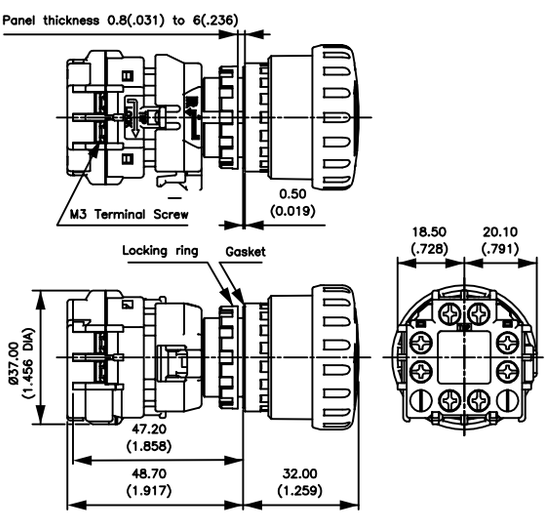

Ø 60 mm name plate

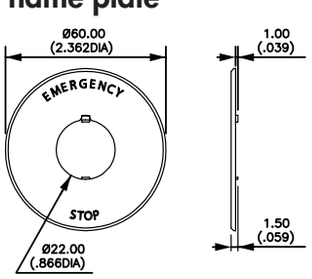

Legend "EMERGENCY STOP" is indicated outside a Ø 44 mm circle.

A02-U27Y

Anti-rotation ring

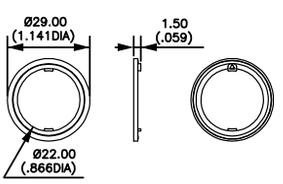

A02-U9ZRL

Locking ring wrench

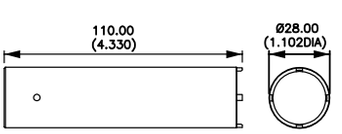

A02-9ZT1

A02ESH1512-A