E43014

Clamp fitting for process sensors

MOUNTING ADAPTER NPT3/4/D22

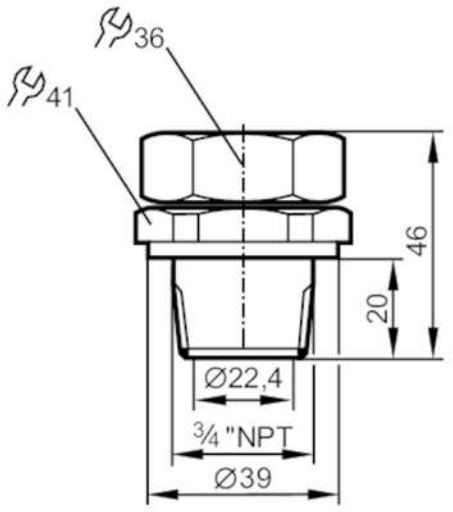

Application		
Design		for climatic tube LK, LI
Installation		Clamp fitting
Pressure rating	[bar]	0.5
Operating conditions		
Ambient temperature	[°C]	0...80
Mechanical data		
Weight	[g]	208
Dimensions	[mm]	Ø 39 / L = 46
Materials		stainless steel; NBR; brass
Tightening torque	[Nm]	6...8
Sensor connection		Ø 22 mm
Process connection		threaded connection 3/4" NPT external thread
Remarks		
Pack quantity		1 pcs.