E21278

Pinhole mask

PINHOLE O6 1 MM

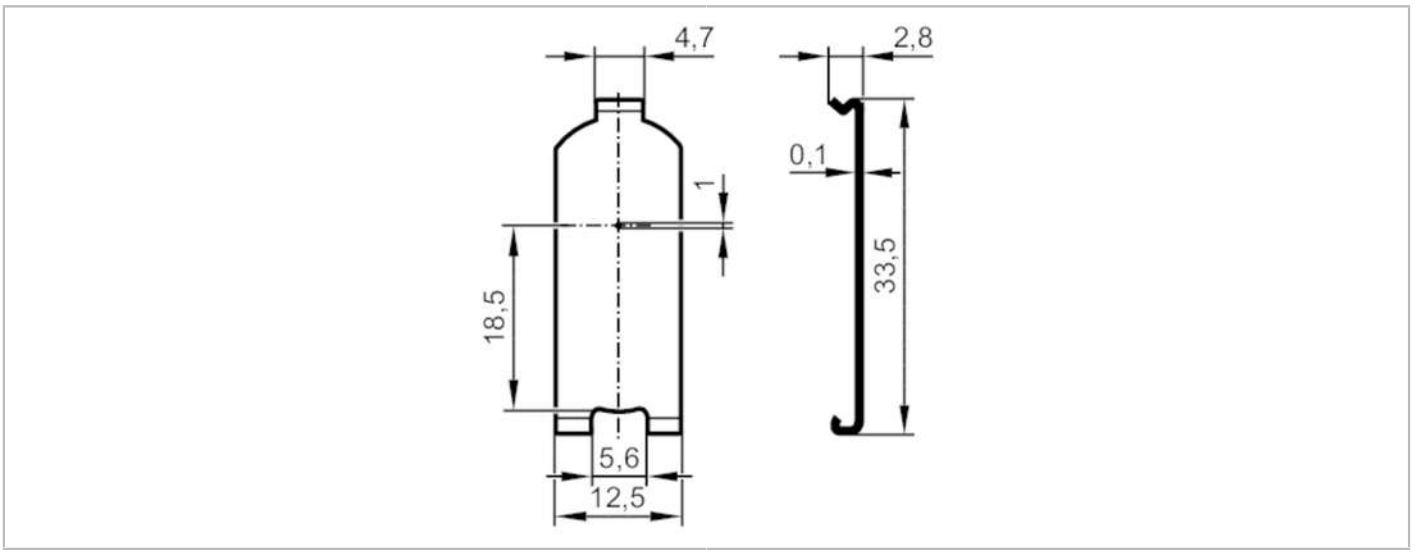

Application		
Design		for types O6E / O6S Kunststoff
Application	[m]	0.2
Detection zone		
Diameter of the smallest detectable object	[mm]	0.4
Mechanical data		
Weight	[g]	6
Dimensions	[mm]	33.5 x 12.5 x 2.8
Materials		stainless steel (301/1.4310)
Remarks		
Remarks		The smallest object can only be detected if a mask is attached to both transmitter and receiver.
Pack quantity		1 pcs.