Part Number:	**BU-16-***
Description:	**Unshrouded Stackable Banana Plug**
2607	

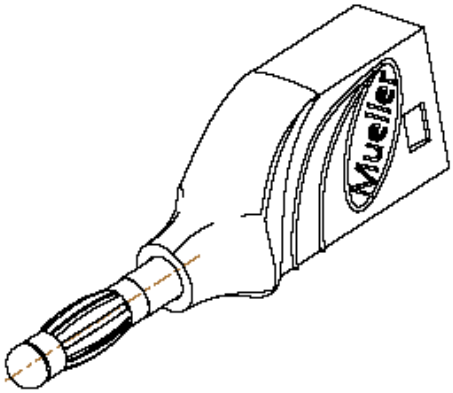

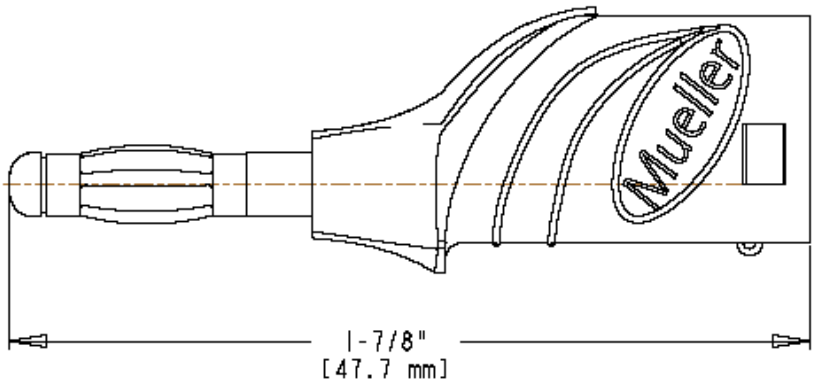

- Unshrouded Stackable Banana Plug, Nine leaf cage spring
- Material: Cage Spring: Nickel plated beryllium copper; Insulator: Nylon
- Length: 1.88”(47.7 mm)
- *Std. Colors: -0 Black, -2 Red
- Rating: 1000 Volts, 15 Amps (Hand free)
- Wires up to #18 AWG wires may be easily soldered to plug
- RoHS Compliant

Mueller Electric Company
1625 E. 31st Street
Cleveland, Ohio 44114

ISO 9001:2000
Over 95 Years Of Innovation
www.muellerelectric.com

TEL. 800-955-2629
TEL. 216-771-5225
FAX. 216-771-3068