120x120x38 mm

70~117 CFM



Specifications

Model	P/N	Bearing (● VAPO ○ BALL ⦿ Sleeve)	Rating Voltage (VAC)	Freq. (Hz)	Power Current (AMP)	Power Consumption (WATTS)	Speed (RPM)	Air Flow (CFM)	Static Pressure (Inch-H_2O)	Noise (dB(A))	Weight (g)
SP100A	1123XSL.GN	⦿	115	50/60	0.26/0.24	22/20	2700/3100	95/115	0.33/0.38	44/49	550
SP100A	1123XST.GN	⦿	115	50/60	0.26/0.24	22/20	2700/3100	95/115	0.33/0.38	44/49	550
SP101A	1123HSL.GN	⦿	115	50/60	0.21/0.18	20/18	2550/2900	85/105	0.25/0.30	43/48	550
SP101A	1123HST.GN	⦿	115	50/60	0.21/0.18	20/18	2550/2900	85/105	0.25/0.30	43/48	550
SP102A	1123MSL.GN	⦿	115	50/60	0.17/0.16	15/15	2400/2600	78/84	0.14/0.21	33/38	550
SP102A	1123MST.GN	⦿	115	50/60	0.17/0.16	15/15	2400/2600	78/84	0.14/0.21	33/38	550
SP103A	1123LSL.GN	⦿	115	50/60	0.13/0.11	11/11	2200/2000	76/70	0.12/0.08	38/36	550
SP103A	1123LST.GN	⦿	115	50/60	0.13/0.11	11/11	2200/2000	76/70	0.12/0.08	38/36	550
SP100A	1123XBL.GN	○	115	50/60	0.26/0.24	22/20	2850/3150	97/117	0.34/0.39	45/50	550
SP100A	1123XBT.GN	○	115	50/60	0.26/0.24	22/20	2850/3150	97/117	0.34/0.39	45/50	550
SP101A	1123HBL.GN	○	115	50/60	0.21/0.18	20/18	2750/3050	87/107	0.26/0.32	45/50	550
SP101A	1123HBT.GN	○	115	50/60	0.21/0.18	20/18	2750/3050	87/107	0.26/0.32	45/50	550
SP102A	1123MBL.GN	○	115	50/60	0.17/0.16	16/15	2500/2700	80/88	0.15/0.22	35/40	550
SP102A	1123MBT.GN	○	115	50/60	0.17/0.16	16/15	2500/2700	80/88	0.15/0.22	35/40	550
SP103A	1123LBL.GN	○	115	50/60	0.13/0.11	11/11	2150/2300	72/78	0.09/0.13	37/39	550
SP103A	1123LBT.GN	○	115	50/60	0.13/0.11	11/11	2150/2300	72/78	0.09/0.13	37/39	550

Frame : Aluminum alloy

Safety : UL-CUL/TUV/CE/CCC

Air Flow-Static Pressure Characteristics

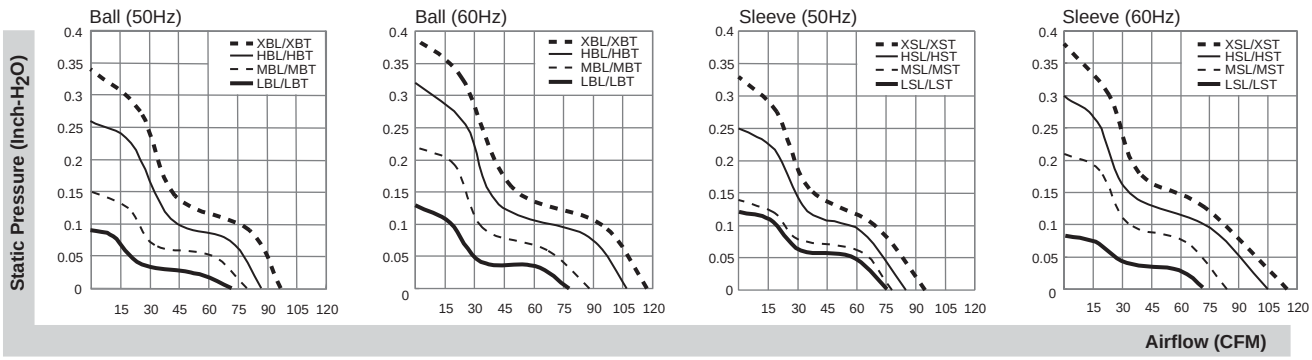

External dimensions(mm)

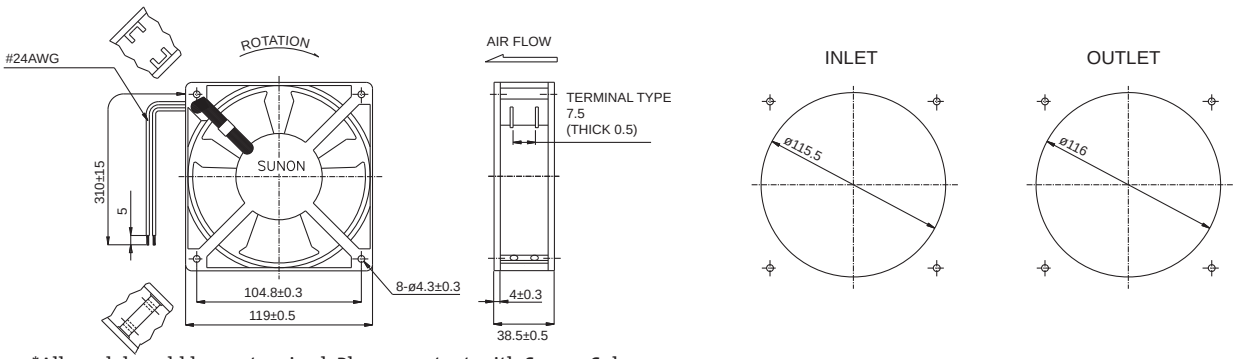

*All model could be customized. Please contact with Sunon Sales.

*Specifications are subject to change without notice. Please Visit SUNON website at http://www.sunon.com for update information.

120x120x38 mm

70~117 CFM



Specifications

Model	P/N	Bearing (● VAPO ○ BALL ⦿ Sleeve)	Rating Voltage (VAC)	Freq. (Hz)	Power Current (AMP)	Power Consumption (WATTS)	Speed (RPM)	Air Flow (CFM)	Static Pressure (Inch-H_2O)	Noise (dB(A))	Weight (g)
DP200A	2123XSL.GN	⦿	220-240	50/60	0.14/0.12	22/21	2700/3100	95/115	0.33/0.38	44/49	550
DP200A	2123XST.GN	⦿	220-240	50/60	0.14/0.12	22/21	2700/3100	95/115	0.33/0.38	44/49	550
DP201A	2123HSL.GN	⦿	220-240	50/60	0.125/0.11	20/19	2550/2900	85/105	0.25/0.30	43/48	550
DP201A	2123HST.GN	⦿	220-240	50/60	0.125/0.11	20/19	2550/2900	85/105	0.25/0.30	43/48	550
DP202A	2123MSL.GN	⦿	220-240	50/60	0.09/0.08	16/15	2300/2500	78/84	0.14/0.21	33/38	550
DP202A	2123MST.GN	⦿	220-240	50/60	0.09/0.08	16/15	2300/2500	78/84	0.14/0.21	33/38	550
DP203A	2123LSL.GN	⦿	220-240	50/60	0.06/0.05	11/10	2000/1800	70/63	0.08/0.07	36/32	550
DP203A	2123LST.GN	⦿	220-240	50/60	0.06/0.05	11/10	2000/1800	70/63	0.08/0.07	36/32	550
DP200A	2123XBL.GN	○	220-240	50/60	0.14/0.12	22/21	2850/3150	97/117	0.34/0.39	45/50	550
DP200A	2123XBT.GN	○	220-240	50/60	0.14/0.12	22/21	2850/3150	97/117	0.34/0.39	45/50	550
DP201A	2123HBL.GN	○	220-240	50/60	0.125/0.11	20/19	2750/3050	87/107	0.26/0.32	45/50	550
DP201A	2123HBT.GN	○	220-240	50/60	0.125/0.11	20/19	2750/3050	87/107	0.26/0.32	45/50	550
DP202A	2123MBL.GN	○	220-240	50/60	0.09/0.08	16/15	2400/2600	78/84	0.14/0.21	34/39	550
DP202A	2123MBT.GN	○	220-240	50/60	0.09/0.08	16/15	2400/2600	78/84	0.14/0.21	34/39	550
DP203A	2123LBL.GN	○	220-240	50/60	0.05/0.06	10/10	2300/2150	78/72	0.13/0.09	39/37	550
DP203A	2123LBT.GN	○	220-240	50/60	0.05/0.06	10/10	2300/2150	78/72	0.13/0.09	39/37	550

Frame : Aluminum alloy

Safety : UL-CUL/TUV/CE/CCC/BSMI

Air Flow-Static Pressure Characteristics

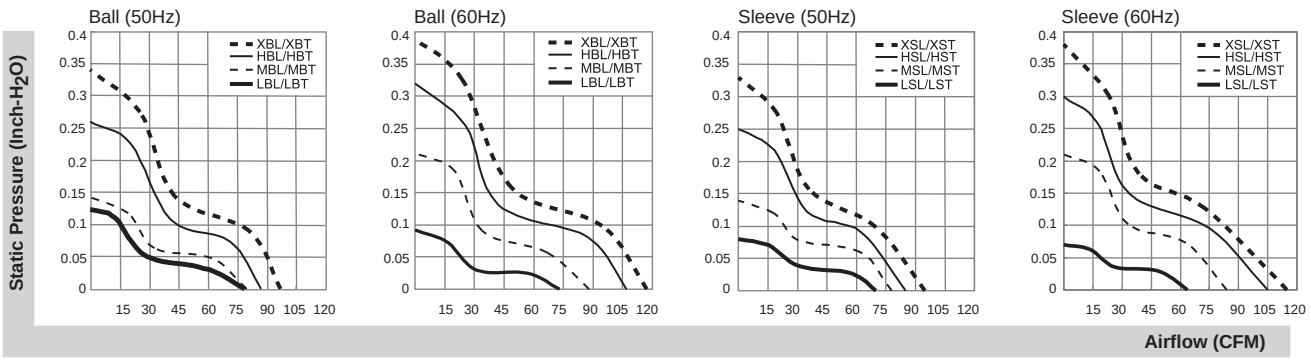

External dimensions(mm)

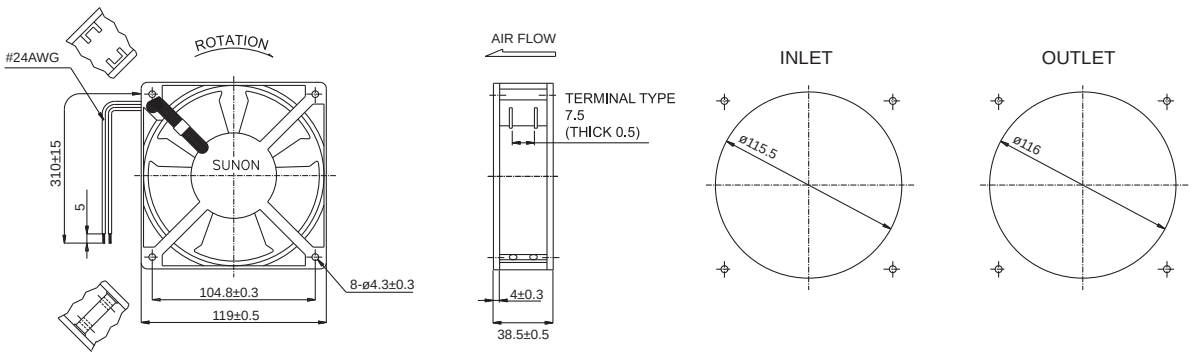

*All model could be customized. Please contact with Sunon Sales.

*Specifications are subject to change without notice. Please Visit SUNON website at http://www.sunon.com for update information.