SURE GRIP™ CONTROLS INC.
A Bailey Hydraulics Company

SU SERIES HANDLE

TECHNICAL INFORMATION

Description

The Sure Grip "SU" Series Control Grip is a low cost compact handle designed for simple applications that require few switches.

The "SU" handle is configurable with all the Sure Grip Handle Options such as; slider modules, rocker modules, microjoystick, LED's, toggle switches and more. It also offers accessories such as bushing adapters, studs, sealed connectors and more. (Please refer to Handle Accessories on our website.)

The cases are molded from a high impact plastic polymer into a comfortable shape for a rugged and lightweight control handle for extreme duty applications. The standard Sure Grip switches are covered with our patented overlay design.

Standard configurations are available for next day shipping (please contact factory for details).



Features

- ► Sealing up to IP67
- ► Rugged design
- ► Overlay customizable
- ► Switch tested to 10 million operations
- ► Multiple trigger options available
- ► Supports 1 Microjoystick
- ► Supports 1 Slider or Rocker Module
- ► Supports up to 2 faceplate switches

Specifications are subject to change without notice

Doc #: 550.0060.2016.12.15

MOMENTARY SWITCH SPECIFICATIONS

Switch Options:	Load	Voltage	Operating Temp
Unsealed Standard - IP40	4 A	30 Vdc	-25°C to +85°C
Sealed Switch - IP67	3 A	30 Vdc	-40°C to +85°C
Unsealed Gold contact - IP40	100 mA	30 Vdc	-25°C to +85°C
Sealed Gold Switch - IP67	100 mA	30 Vdc	-40°C to +85°C

MAINTAINED SWITCH SPECIFICATIONS

Switch Options:	Load	Voltage	Operating Temp
Push Button	3 A	30 Vdc	-30°C to +85°C

TOGGLE SWITCH SPECIFICATIONS

Switch Options:	Load	Voltage	Operating Temp
Toggle Switches	3 A	30 Vdc	-30°C to +85°C
Functions	On-On / On-Off-On / Mom-Off-Mom / On-Off-Mom		

LED SPECIFICATIONS

LED Options:	Load	Voltage	Operating Temp
LED	20 mA	5, 12, 24 Vdc	-40°C to +85°C
Colours Available	Red / Green / Tri-colour (R/Y/G)		

CABLE SPECIFICATIONS

Cable Options:	WR-09B	WR-10B	WR-13B	WR-15B
Conductor	9	10	13	15
Material	Tinned Copper	Tinned Copper	Tinned Copper	Tinned Copper
Strand	19 Twisted	7 Twisted	19 Twisted	7 Twisted
AWG	20	22	22	22
Insulation	SR-PVC	SR-PVC	SR-PVC	SR-PVC
Outer Jacket	PVC FT4	PVC FT4	PVC FT4	PVC FT4
Operating Temperature	-40°C to +105°C	-40°C to +105°C	-40°C to +105°C	-40°C to +105°C

Specifications are subject to change without notice

Doc #: 550.0060.2016.12.15

Dimension

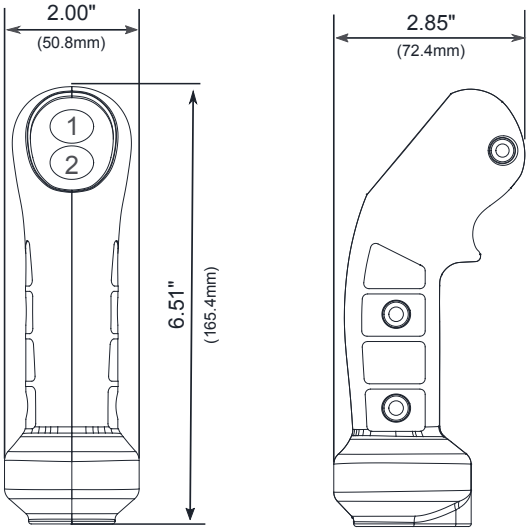

Typical Wiring

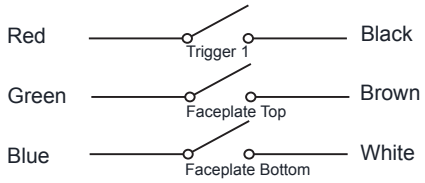

SU SERIES HANDLE

SURE GRIP™ CONTROLS INC.
A Bailey Hydraulics Company

ORDERING GUIDE

SU - [ ] - [ ] - [ ] - [ ] #1 [ ] #2 - [ ] - [ ] - [ ] - [ ] - [ ] - [ ] #1 [ ] #2

Example: SU - B - B - SN - A F - N - N - E - N - 120 - D E

Note: For further options, call factory.

Handle Color
B - Black
G - Grey

Switch Style
N - No Switch
A - Unsealed 4Amp Switch
B - Sealed 3Amp Switch
C - Unsealed 100mA Switch
D - Sealed 100mA Switch

Trigger Options
NN - None
SN - Single

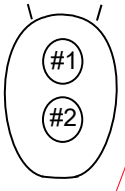

Position Reference

Joystick Option:
N - without Joystick
J - with Joystick

Electronics #1 and #2
N - None
A - DA2 Dual Danfoss
B - DA2C2 Caterpillar Interface
C - DPd Diode-Diverter Protection
D - PS5 5VDC Power Supply
E - SDB Single Driver Board

Wire Length Options
xxx Inches

Boot Mounting
N - None
S - Square
R - Round
J - JSM/JSL Joystick

Mounting Studs
N - None or JSM/JSL installed
R - 12mm x 1.75 x 40mm socket Set Screws
S - 10mm x 1.5 x 40mm Straight Stud
T - 9/16" x 75mm wire exit, Straight Stud
U - 14mm x 2 x 50mm Bent Stud @ 22 degrees
V - 14mm x 2 Bent Stud @ 28 degrees
W - 12mm x 1.75 x 40mm, Bent Stud
X - 12mm x 1.75 x 70mm, Drilled Bent Stud
Y - 5/8" NC - 14mm x 85mm wire exit, Bent Stud
Z - 14mm x 2.0 x 40mm Straight Stud

Function Types
N - None

1 Position
A - Mo Switch
B - Ma Switch
C - Toggle 2Ma
D - Toggle 3Ma
E - Toggle 3Mo
F - LED Red
G - LED Green
H - LED Bi-Colour (R/G)

Mo - Momentary
Ma - Maintained
F - Friction

2 Positions
J - Proportional Slider 3Mo
K - Proportional Slider 3Ma
L - Proportional Slider F



M - Switched Rocker 3Mo
P - Switched Rocker 2Ma
Q - Switched Rocker 3Ma
R - Switched Rocker MaMo
S - Proportional Rocker 3Mo
T - Proportional Rocker 3Ma

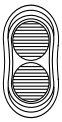

4 Positions
V - Microjoystick
Z - Multi position designator (See example below)



Mounting Bushings
N - None or JSM/JSL installed

A - Adapter Bushing - 1/4" Hole
B - Adapter Bushing - 10mm x 1.5
C - Adapter Bushing - 10mm Set Screws
D - Adapter Bushing - 12mm x 1.25
E - Adapter Bushing - 12mm x 1.5
F - Adapter Bushing - 12mm x 1.75
G - Adapter Bushing - 14mm x 2
H - Adapter Bushing - 5/8" NC
J - Adapter Bushing - 14mm x 1.5
K - Adapter Bushing - 3/8" NC
L - Adapter Bushing - 1/2" NC
M - Adapter Bushing - 9/16" NC

Clamping
P - Clamping Bushing 12mm
Q - Clamping Bushing 14mm

Part #: SU-B-B-SN-AF-N-E-N-N-120-DE

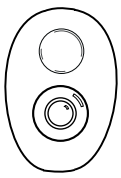
Example Faceplate

Description
Model: (SU) SU handle
Color: (B) Black
Switch Style: (B) Sealed 3Amp
Trigger Options: (SN) Single Trigger
Functions:
- (A) Momentary Switch Position 1
- (F) LED Red Position 2
Joystick Option: (N) None
Mounting Adaptor: (E) Adapter Bushing - 12mm x 1.5
Mounting Studs: (N) None
Boot Mounting: (N) None
Wire Length Options: (120) 120 inches or 10 feet
Electronics:
- (D) PS5 Power Supply
- (E) SDB Single Driver Board

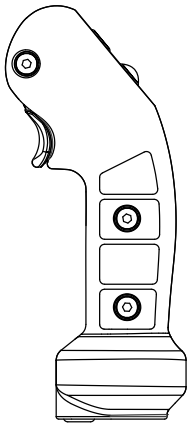

Specifications are subject to change without notice

Doc #: 550.0060.2016.12.15