Preset counters, electronic

LCD preset counters | **Multifunctional – pulse, frequency, time – 1...6 presets (AC+DC)** | **Codix 923 / 924**



The multifunction preset counters Codix 923 / 924 can be used universally. These preset pulse counters, tachometers or preset timers with up to 6 presets can solve a wide variety of control and monitoring tasks in every application.

With their two-line display in 4 different versions the counters are very easy to read and simple to programme using the clearly laid-out decade keys. Complex control tasks can be carried out using a batch count or total count function.



Multifunctional

- Counter, tachometer and timer in one device.
- Can be used a preset counter, batch counter, totalizer or position display with tracking preset.
- Presets: 923: 1, 924: 2, 924-4: 4, 924-6: 6.
- Relay or optocoupler outputs.
- Many different count modes for pulse inputs, time and frequency.
- Scalable input using multiplication and division factor
- Set value.
- Averaging, start delay (tachometer).
- Step or tracking presets (eliminate the need for reprogramming of the pre-signal).
- Multi-range supply voltage.

Fast and user-friendly

- Direct input of the presets via the front keys or via the Teach-In input.
- Fast installation thanks to plug-in screw terminals.
- Max. count frequency 65 kHz.
- Simultaneous display of the actual and of the preset value, or of the actual value and of the batch / totalizing counter.
- Annunciators for the displayed preset and for the output status.
- 3 predefined parameter settings.
- Direct entry into the programming.
- Minimal installation depth.
- 4-stage RESET modes.
- 3-stage key lockout.
- Multicolor display for improved differentiation.

Order code

6.92 **X** (a) . 0 1 **X** (b) **X** (c) . **X** (d) **X** (e) **X** (f)

a *Number of presets*
3 = 1 preset
4 = 2, 4 or 6 presets

b *Output*
0 = relays
1 = optocouplers (only **a** = 4) [2]

c *LCD options*
0 = no backlighting
1 = green backlighting [1]
2 = LED look, negative, red backlighting [1]
3 = multicolor, negative red/green backlighting

d *Supply voltage*
0 = 100 ... 240 V AC, ±10 %
2 = 24 V AC, ±10 %
3 = 10 ... 30 V DC

e *Input trigger level*
0 = standard level (HTL)
A = 4 ... 30 V DC level [1]

f *Version*
0 = standard 923/924
B = 6 optocoupler outputs [2] 924-6 (only **b** = 1)
C = 4 relay outputs [2] 924-4 (only **b** = 0)

Delivery specification
- Preset counter
- Mounting clip
- 8 pin screw terminal
- 7 pin screw terminal
- Operating instructions

Additional inputs, outputs or interface types on request

Stock types

6.923.0100.000	6.924.0100.000
6.923.0100.300	6.924.0100.300
6.923.0101.000	6.924.0101.000
6.923.0101.300	6.924.0101.300
6.923.0102.000	6.924.0102.000
6.923.0102.300	6.924.0102.300
6.923.0103.000	6.924.0103.000
6.923.0103.300	6.924.0103.300
	6.924.0100.00C
	6.924.0100.30C
	6.924.0113.00B
	6.924.0113.30B

1) 24 V AC on request

2) Not possible in 24 V AC.

© Fritz Kübler GmbH, subject to errors and changes. 03/2023

LCD preset counters | Multifunctional – pulse, frequency, time – 1...6 presets (AC+DC) | Codix 923 / 924

Accessories / Mounting examples

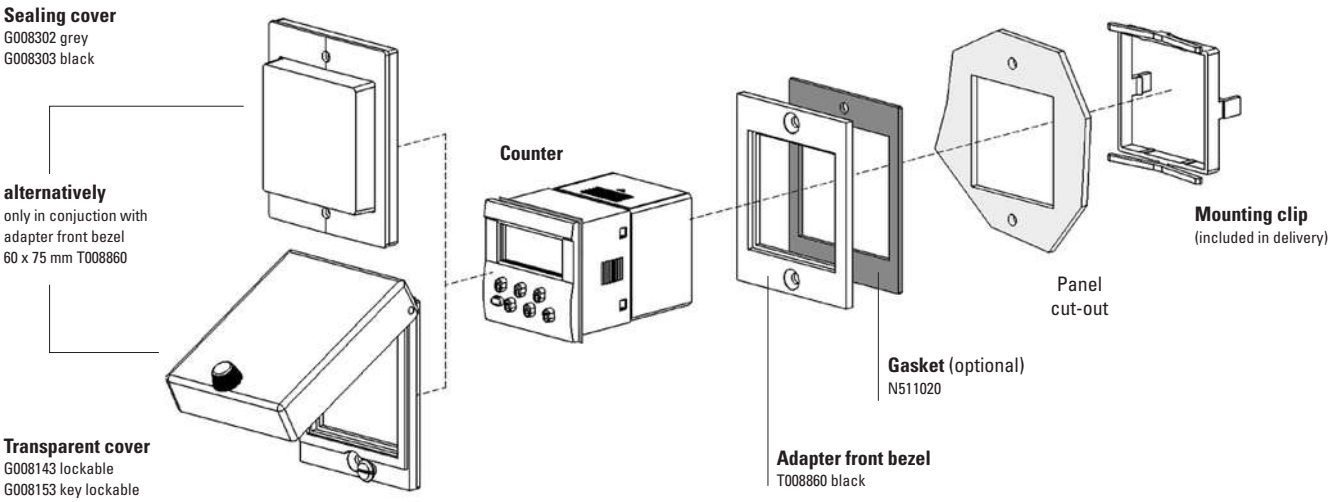

		Type / size	Description		Order no.	suitable gasket
Adapter front bezel		**55 x 55 mm [2.17 x 2.17]**	for cut-out 50 x 50 mm [1.97 x 1.97"] or ø 50,5 mm [1.99"] to cut-out 45 x 45 mm [1.77 x 1.77"]	grey black	**T008170** **T008171**	**N511017**
		**55 x 55 mm [2.17 x 2.17]**	for cut-out 50 x 50 mm [1.97 x 1.97"] to cut-out 45 x 45 mm [1.77 x 1.77"]	black	**T008853**	**N511004**
		**60 x 75 mm [2.36 x 2.95]**	for cut-out 50 x 50 mm [1.97 x 1.97"] to cut-out 45 x 45 mm [1.77 x 1.77"]	black	**T008860**	**N511020**
		**72 x 72 mm [2.83 x 2.83]**	for cut-out 68 x 68 mm [2.68 x 2.68"] to cut-out 45 x 45 mm [1.77 x 1.77"]	grey black Mating clip	**T008176** **T008177** **T009420**	**N511016**
		**ø 72 mm [2.83]**	for cut-out ø 60 mm [2.36"] to cut-out 45 x 45 mm [1.77 x 1.77"]	black	**N510226**	–
Sealing cover IP65		**K2**	only in conjuction with adapter front bezel 60 x 75 mm T008860	transparent / grey transparent / black	**G008302** **G008303**	–
Transparent cover IP65		**2 Dv** (mounted on bezel)	cover lockable, for cut-out 50 x 50 [1.97 x 1.97], only in conjuction with adapter front bezel 60 x 75 mm T008860	transparent / black	**G008143**	–
		**2 Dvs** (mounted on bezel)	cover key lockable, for cut-out 50 x 50 [1.97 x 1.97], only in conjuction with adapter front bezel 60 x 75 mm T008860	transparent / black	**G008153**	–
Mounting frame		**cut-out 50 x 50 mm [2.36 x 2.36]**	for snap-on mounting on 35 mm [1.38"] top-hat DIN rail	chromated	**G300003**	
Screw terminal (replacement part)			1 ... 8, pitch 3.81 9 ... 15 (for 923 / 924), pitch 5.08 9 ... 15 (for 924-4 / 924-6), pitch 5.08 16 ... 20 (for 924-4 / 924-6), pitch 3.81	8-pin 7-pin 7-pin 5-pin	**N100498** **N100548u002** **N100400u002** **N100399u002**	

incl. in delivery

© Fritz Kübler GmbH, subject to errors and changes. 03/2023

LCD preset counters | **Multifunctional – pulse, frequency, time – 1...6 presets (AC+DC)** | **Codix 923 / 924**

Technical data

General technical data

Display	standard	2 line 2 x 6 digits LCD display positive green with optional backlighting
	LED look	negative red backlighting
	multicolor	upper line negative, red backlighting lower line negative, red or green backlighting (programmable)
Operating temperature		-20 °C ... +65 °C [-4 °F ... +149 °F] (non-condensing)
Storage temperature		-25 °C ... +75 °C [-13 °F ... +167 °F]
Relative humidity at +40 °C [+104 °F]		93 % (non-condensing)
Altitude		up to 2000 m [6562']

Mechanical characteristics

Protection	IP65 (front side)
Weight	approx. 125 g [4.41 oz]

Electrical characteristics

Sensor supply voltage	AC (50/60 Hz)	100 ... 240 V AC, ±10 %, max. 15 VA 24 V AC ±10 %, max. 6 VA
	DC	10 ... 30 V, max. 5.5 W
External fuse protection	100 ... 240 V AC	T 0.1 A
	24 V AC	T 0.315 A
	10 ... 30 V DC	T 0.2 A
Data retention		> 10 years, EEPROM
Input modes	pulse counters:	Count direction (cnt.dir), Difference (up.dn), Addition A+B (up.up), phase discriminator x1, x2, x4 (quad, quad x2, quad x4), Ratio (A/B), Ratio in % ((A-B)/A x100%)
	frequency meter:	A, A-B, A+B quad, A/B, (A-B)/A x 100 %
	timer:	4 Start modes: FrErun, Auto, InpA.InpB., InpB.InpB.
Sensor supply voltage	AC supply	24 V DC ±15 %, 80 mA
	DC supply	max. 80 mA, external supply voltage is connected through
Device safety	designed to	EN 61010-1, EN 61010-2-201
	protection class	2
	application area	pollution level 2

Approvals

UL compliant in accordance with	File no. E128604
CE compliant in accordance with	
EMC Directive	2014/30/EU
RoHS Directive	2011/65/EU
Low Voltage Directive	2014/35/EU
UKCA compliant in accordance with	
EMC Regulations	S.I. 2016/1091
RoHS Regulations	S.I. 2012/3032
Low Voltage Regulations	S.I. 2016/1101

Inputs

Count inputs			A and B
Polarity of the inputs			programmable for all inputs in common NPN/PNP
Input resistance			5 kΩ
Count frequency	pulse counters		max. 55 kHz
	tachometers		max. 65 kHz (details see manual) can be damped to 30 Hz (mechanical contacts)
Control / Reset input			MPI, Lock, Gate, Reset
Min pulse duration of signal and control inputs			10 ms / 1 ms
Switching levels with AC supply	HTL level:	LOW	0 ... 4 V DC
		HIGH	12 ... 30 V DC
	4 ... 30 V DC:	LOW	0 ... 2 V DC
		HIGH	3.5 ... 30 V DC
Switching levels with DC supply	HTL level:	LOW	0 ... 0.2 x U_B
		HIGH	0.6 x U_B ... 30 V DC
	4 ... 30 V DC:	LOW	0 ... 2 V DC
		HIGH	3.5 ... 30 V DC
Pulse shape			variable, Schmitt-Trigger characteristics

Outputs

Outputs relay version (1 changeover contact with 923)

Switching voltage	max. 250 V AC / 110 V DC
Switching current	max. 3 A AC/DC min. 30 mA DC
Switching capacity	max. 750 VA / 90 W
Output 1 (Relay closing contact, programmable as normally open (NO) or normally closed (NC))	
Mech. service life (switching cycles)	2×10^7
N° of switching cycles at 3 A / 250 V AC	1×10^5
N° of switching cycles at 3 A / 30 V DC	1×10^5
Output 2 (Relay with changeover contact)	
Mech. service life (switching cycles)	2×10^7
N° of switching cycles at 3 A / 250 V AC	5×10^4
N° of switching cycles at 3 A / 30 V DC	5×10^4

Outputs optocoupler version

Output 1 and 2 (npn optocoupler)

switching power	30 V DC / 10 mA
U_{CESAT} at IC = 10 mA	max. 2.0 V
U_{CESAT} at IC = 5 mA	max. 0.4 V

Reaction time of the outputs (pulse / time)	relay	approx. 13 ms
	optocoupler	approx. 1 ms Details see instruction manual
Response time of the frequency meter		100/600 ms details see instruction manual

© Fritz Kübler GmbH, subject to errors and changes. 03/2023

LCD preset counters | **Multifunctional – pulse, frequency, time – 1...6 presets (AC+DC)** | **Codix 923 / 924**

Codix 924-4 and 924-6

The preset counters 924-4 and 924-6 vary from the standard counters 923 and 924 as follows:

- Relay version: 924-4, 4 presets, 2 additional relays
- Optocoupler version: 924-6: 6 presets, 4 additional optocoupler outputs
- No tracking presets
- Presets 1 and 4 affect the batch or total counter
- Presets 2, 3, 5 and 6 (Type: 924-6) or presets 2 and 3 (Type 924-4) affect the main counter
- Preset 2 is the main preset; it triggers the automatic reset
- Preset 2 is likewise the main preset for all further counting modes (the other presets are pre-signals)

Additional technical data Codix 924-4

Output 3	
Relay with closing contact (programmable as normally closed NC or normally open NO)	
Switching voltage	max. 125 V AC / 110 V DC
Switching current	max. 1 A AC / 1 A DC min. 1 mA AC/DC
Switching capacity	max. 62.5 VA / 30 W
Mech. service life (switching cycles)	5×10^7
N° of switching cycles at 0.5 A / 125 V AC	1×10^5
N° of switching cycles at 1 A / 30 V DC	1×10^5
Output 4	
Relay with changeover contact	
Switching voltage	max. 125 V AC / 110 V DC
Switching current	max. 1 A AC / 1 A DC min. 1 mA AC/DC
Switching capacity	max. 62.5 VA / 30 W
Mech. service life (switching cycles)	5×10^7
N° of switching cycles at 1 A / 110 V AC	$1x10^5$
N° of switching cycles at 1 A / 30 V DC	$1x10^5$
Reaction time of the outputs, Relay	< 7 ms (only impulse and time counter)
Max. count frequency	50 kHz
Operating temperature	-20 °C ... +55 °C [-4 °F ... +131 °F]

Additional technical data Codix 924-6

Output 1 ... 6		
NPN optocouplers		
Switching capacity		30 V DC / 10 mA
	U_{CESAT} at IC = 10 mA	max. 2.0 V
	U_{CESAT} at IC = 5 mA	max. 0.4 V
output 3, 4, 5 and 6 with common emitter		
Reaction time of the outputs, optocouplers (only impulse and time counter)		
	Add/Sub/	< 1 ms
	with auto repeat	< 1 ms
	A/B; (A-B)/A	< 23 ms
Max. count frequency		50 kHz

© Fritz Kübler GmbH, subject to errors and changes. 03/2023

LCD preset counters | **Multifunctional – pulse, frequency, time – 1...6 presets (AC+DC)** | **Codix 923 / 924**

Terminal assignment

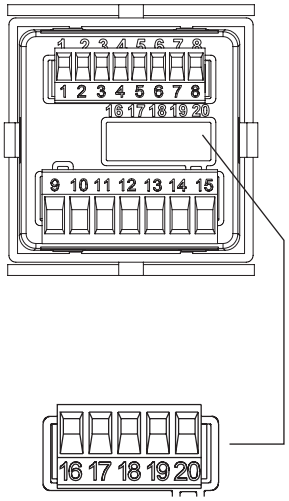

Pin	Signal and control inputs
1	Sensor supply voltage AC: 24 V DC / 80 mA DC: U_B interconnected
2	GND (0 V DC)
3	INP A (Signal input A)
4	INP B (Signal input B)
5	RESET (Reset input)
6	LOCK (Key locking input)
7	GATE (Gate input)
8	MPI (User input)

Pin	Version with relays/optocouplers
9	Relay contact C. / Collector
10	Relay contact N.O. / Emitter
11	Relay contact C. / Emitter
12	Relay contact N.O. / not assigned
13	Relay contact N.C. / Collector
14	AC: 24 V AC, 100 ... 240 V AC, ±10 % N~ DC: 10 ... 30 V DC
15	AC: 24 V AC, 100 ... 240 V AC, ±10 % L~ DC: GND (0 VDC)

Output 1
Output 2
Supply voltage

Pin	Additional connections 924-4	
16	Relay contact	N.C.4 output 4
17	Relay contact	C.4 output 4
18	Relay contact	N.O.4 output 4
19	Relay contact	N.O.3 output 3
20	Relay contact	C.3 output 3

Pin	Additional connections 924-6	
16	Common-Emitter	output 3 to 6
17	Collector 6	output 6
18	Collector 5	output 5
19	Collector 4	output 4
20	Collector 3	output 3

Dimensions

Dimensions in mm [inch]

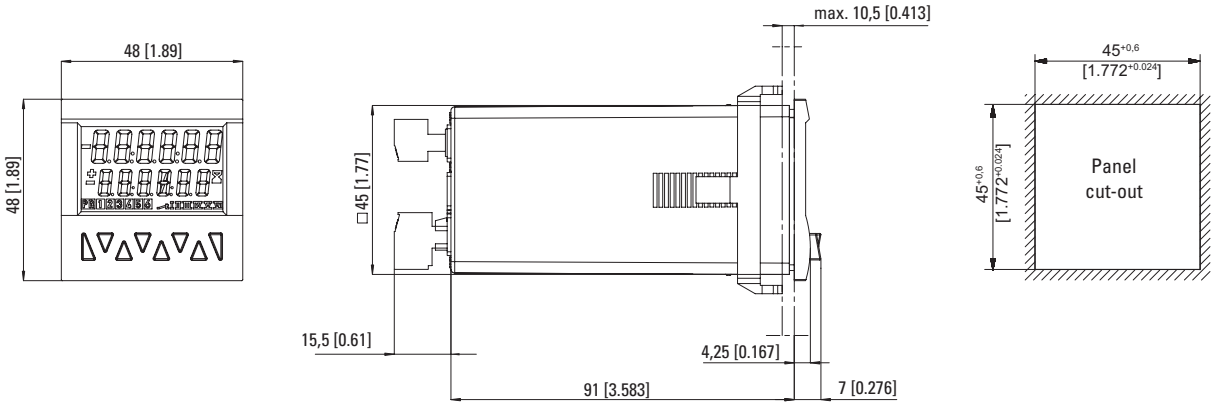

LCD preset counters | **Multifunctional – pulse, frequency, time – 1...6 presets (AC+DC)** | **Codix 923 / 924**

Pulse counter

Functions / count modes:

- Count with direction mode
- Difference mode
- Quadrature mode quad/quad2/quad4
- Add, Sub, automatic reset
- 2-input adding mode A+B
- Ratio measurement A/B
- Percentage difference measurement (A-B)/A x 100 %
- Batch counting
- Totalizer (overall total)
- Multiplication and division factor (up to 99.9999)
- Set value
- Step or tracking preset

Application examples

CountDir + Add

Roller shutter door with automatic shut-off

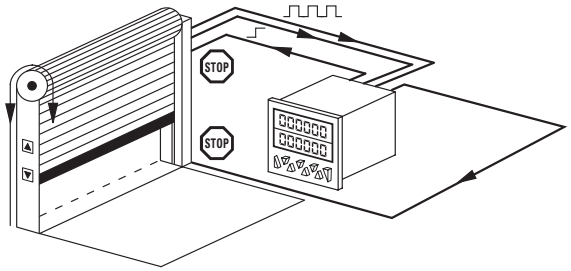

Quad + Add

Running direction and position on milling machines,
Limit switch monitoring

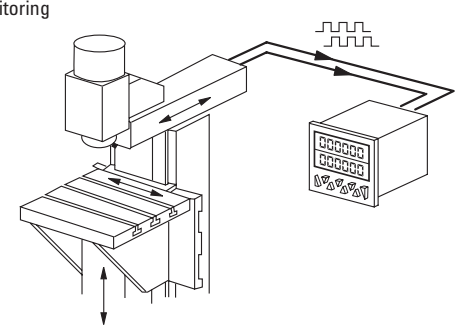

UpDown + Add

Automatic subtraction of faulty or reject parts from the total piece count

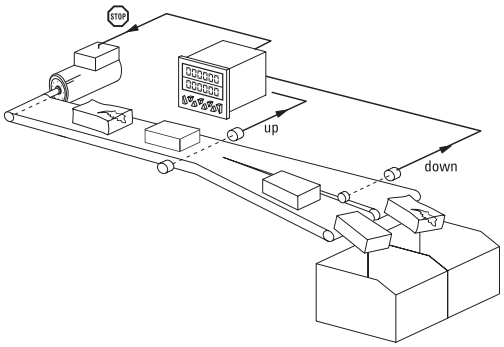

CountDir + Batch

Logging of piece numbers and packing units plus control of replenishment of packing cartons

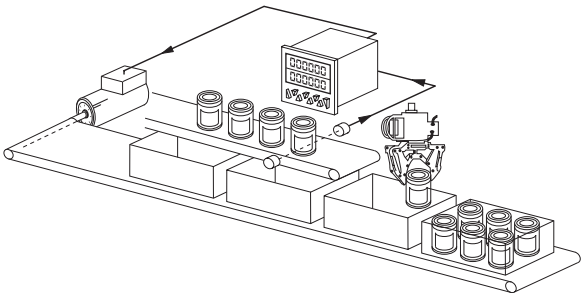

UpUp + Add

Adding up of two parallel or staggered production lines

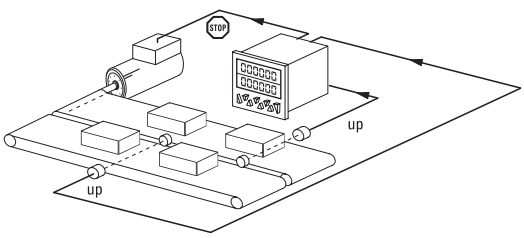

Quad + Add tot

Cut-to-length with overall total count and control of the machine

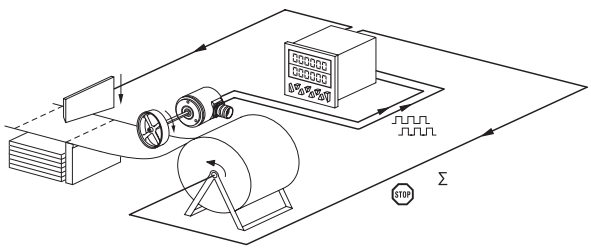

© Fritz Kübler GmbH, subject to errors and changes. 03/2023

LCD preset counters | **Multifunctional – pulse, frequency, time – 1...6 presets (AC+DC)** | **Codix 923 / 924**

Frequency meter (tachometer)

Functions / count modes:

- A
- A – B
- A + B
- A / B
- (A – B) / A x 100 % (percentage display)
- Quad (phase discriminator with recognition of direction)
- Averaging
- Start delay
- 2nd tacho input
- Gate input
- Multiplication and division factor (up to 99.9999)

Application examples

A – B

Synchro monitoring and control of two conveyor belts

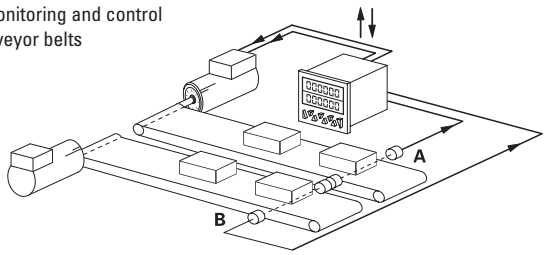

Quad

Speed regulation with indication of direction

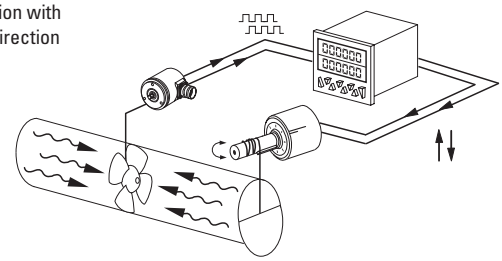

A/B

Ratio measurement

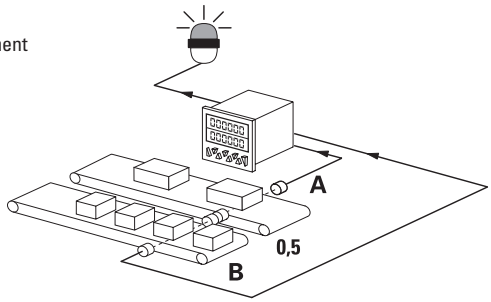

(A-B)/A [%]

Ratio measurement, e.g. for speed alignment

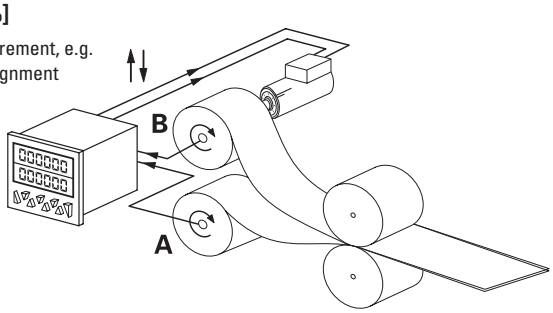

Time and Hours-run meter (timer)

Functions / count modes:

- FrErun (control via gate input)
- Auto (start via reset, stop at preset)
- InpB.InpB (start with first edge at InpB., stop with second edge InpB.)
- InpA. InpB (start with InpA., stop with InpB.)
- Totalizer (overall total)
- Batch counting
- Set value
- Step or tracking preset

Application examples

InpB. InpB

Interval measurement

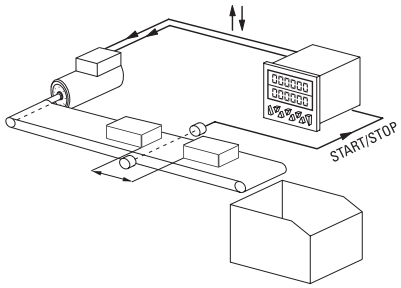

FrErun

Measurement of overall time from switching on the conveyor belt till switching off

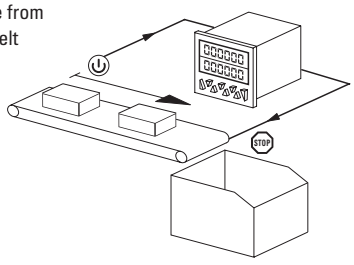

InpA. InpB

Run-time measurement

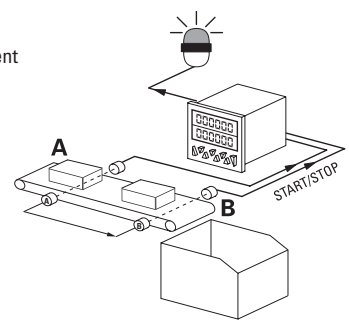

Auto

Time-controlled production line

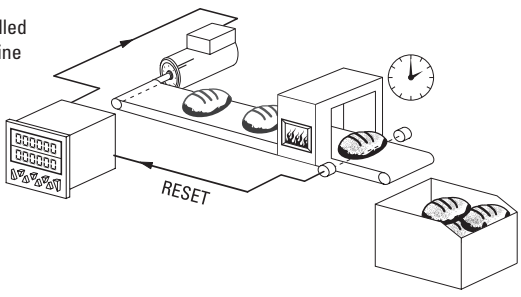

© Fritz Kübler GmbH, subject to errors and changes. 03/2023

LCD preset counters | **Multifunctional – pulse, frequency, time – 1...6 presets (AC+DC)** | **Codix 923 / 924**

Expandable hardware

Expandable on request via modules:

- 4 additional inputs
- Or 4 additional optocoupler outputs
- Or 2 additional relay outputs
- Or RS232/485 communications interfaces

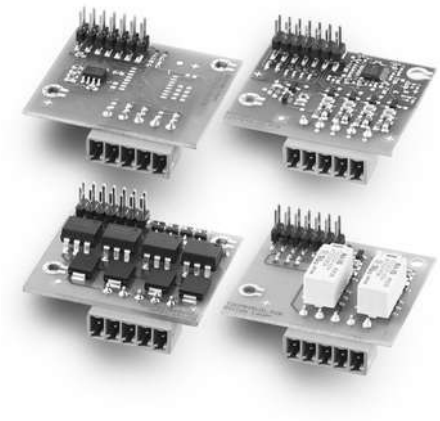

Application examples

- Limit switch monitoring
- Special functions/PLC function
- Initiation of fixed program sequences
- Control of several processes
- Special protocols
- Print commands for logging

Customizable software

Individual customization of software to your application.

For example:

- Separate inputs for total counter and preset counter
- Separate scaling of input A and B
- Programmable measuring period for the tachometer
- Measurement of rotary speeds based on time
- Processing time, measurement of time based on frequency
- With the Multicolor version, the display color changes when reaching the preset, or blinking display with all versions





© Fritz Kübler GmbH, subject to errors and changes. 03/2023