TI01581D/06/EN/02.22-00
71574654
2022-08-01

Technical Information
Proline Promass K 10

Coriolis flowmeter



Flowmeter with minimized total cost of ownership with easy-to-use operation concept

Application

- Measuring principle operates independently of physical fluid properties such as viscosity or density
- Measurement of liquids and gases in utilities and basic applications

Device properties

- Compact dual-tube sensor
- Medium temperature up to +150 °C (+302 °F)
- Process pressure up to 100 bar (1450 psi)
- System integration with HART, Modbus RS485
- Flexible operation with app and optional display

Your benefits

- Cost-effective device for generic use – alternative to mechanical flowmeters
- Fewer process measuring points – multivariable measurement (flow, density, temperature)
- Space-saving installation – no inlet/outlet run needs
- Optimum usability – operation with mobile devices and SmartBlue App or touch screen display
- Easy, time-saving commissioning – guided parameter configuration in advance and in the field
- Integrated verification – Heartbeat Technology

Endress+Hauser
People for Process Automation

Table of contents

About this document 6
Symbols 6
Associated documentation 6
Ordering information 6
Registered trademarks 8

Function and system design 10
Measuring principle 10
Product design 11
IT security 11
Device-specific IT security 12

Input 14
Measured variable 14
Operable flow range 14
Measuring range 14

Output 18
Output versions 18
Output signal 18
Signal on alarm 21
Low flow cut off 21
Ex connection data 21
Galvanic isolation 21
Protocol-specific data 22

Power supply 24
Terminal assignment 24
Supply voltage 24
Power consumption 24
Current consumption 24
Power supply failure 25
Electrical connection 25
Potential equalization 29
Terminals 29
Cable entries 29
Overvoltage protection 29

Cable specification 32
Requirements for connecting cable 32

Performance characteristics 34
Reference operating conditions 34
Maximum measured error 34
Repeatability 35
Response time 35
Influence of ambient temperature 35
Influence of medium temperature 35
Influence of medium pressure 36
Design fundamentals 36

Installation 40
Installation conditions 40

Environment 46
Ambient temperature range 46
Storage temperature 46
Atmosphere 46
Climate class 46
Degree of protection 46
Vibration-resistance and shock-resistance 46
Electromagnetic compatibility (EMC) 46
Interior cleaning 46

Process 48
Medium temperature range 48
Density 48
Flow limit 48
Pressure-temperature ratings 48
Sensor housing 51
Rupture disk 51
Pressure loss 52

Mechanical construction 54
Weight 54
Materials 55
Process connections 55
Surface roughness 55

Dimensions in SI units 58
Compact version 58
Fixed flange 61
Clamp connections 65
Couplings 66
Accessories 68

Dimensions in US units 70
Compact version 70
Fixed flange 73
Clamp connections 74
Couplings 74
Accessories 75

Local display 78
Operating concept 78
Operating options 78
Operating tools 79

Certificates and approvals 82
Ex approval 82
Non-Ex approval 82
Pressure Equipment Directive 82
Sanitary compatibility 82
Pharmaceutical compatibility 82
HART certification 83
Radio approval 83
Other standards and guidelines 83

Application packages 86
Use 86
Heartbeat Verification + Monitoring 86
Density output 86

Accessories 88
Device-specific accessories 88
Communication-specific accessories 89

Service-specific accessory 89
System components 90

About this document

Symbols 6
Associated documentation 6
Ordering information 6
Registered trademarks 8

Symbols

Electronics

⎓ Direct current

~ Alternating current

⎓~ Direct current and alternating current

⏚ Terminal connection for potential equalization

Types of information

✓✓ Preferred procedures, processes or actions

✓ Permitted procedures, processes or actions

✗ Forbidden procedures, processes or actions

ℹ Additional information

Reference to documentation

Reference to page

Reference to graphic

Explosion protection

Ex Hazardous area

Non-hazardous area

Associated documentation

Technical Information	Overview of the device with the most important technical data.
Operating Instructions	All the information that is required in the various phases of the life cycle of the device: from product identification, incoming acceptance and storage, to mounting, connection, operation and commissioning through to troubleshooting, maintenance and disposal as well as the technical data and dimensions.
Sensor Brief Operating Instructions	Incoming acceptance, transport, storage and mounting of the device.
Transmitter Brief Operating Instructions	Electrical connection and commissioning of the device.
Description of Parameters	Detailed explanation of the menus and parameters.
Safety Instructions	Documents for the use of the device in hazardous areas.
Special Documentation	Documents with more detailed information on specific topics.
Installation Instructions	Installation of spare parts and accessories.

ℹ The device documentation is available online on the device product page and in the Downloads area: www.endress.com

Ordering information

Detailed ordering information is available from your nearest sales organization www.addresses.endress.com or in the Product Configurator at www.endress.com:

1. Select the product using the filters and search field.
2. Open the product page.

3. Select **Configuration**.

Product Configurator - the tool for individual product configuration
- Up-to-the-minute configuration data
- Depending on the device: Direct input of measuring point-specific information such as measuring range or operating language
- Automatic verification of exclusion criteria
- Automatic creation of the order code and its breakdown in PDF or Excel output format
- Ability to order directly in the Endress+Hauser Online Shop

Registered trademarks

HART®
Registered trademark of the FieldComm Group, Austin, USA

Modbus®
Registered trademark of SCHNEIDER AUTOMATION, INC.

Bluetooth®
The Bluetooth word mark and Bluetooth logos are registered trademarks of Bluetooth SIG. Inc. and any use of such marks by Endress+Hauser is under license. Other trademarks and trade names are those of their respective owners.

Apple®
Apple, the Apple logo, iPhone, and iPod touch are trademarks of Apple Inc., registered in the U.S. and other countries. App Store is a service mark of Apple Inc.

Android®
Android, Google Play and the Google Play logo are trademarks of Google Inc.

Function and system design

Measuring principle 10
Product design 11
IT security 11
Device-specific IT security 12

Measuring principle

The measuring principle is based on the controlled generation of Coriolis forces. These forces are always present in a system when both translational and rotational movements are superimposed.

$F_c = 2 \cdot \Delta m\ (v \cdot \omega)$

F_c = Coriolis force

Δm = moving mass

ω = rotational velocity

v = radial velocity in rotating or oscillating system

The amplitude of the Coriolis force depends on the moving mass Δm, its velocity v in the system and thus on the mass flow. Instead of a constant rotational velocity ω, the sensor uses oscillation.

In the sensor, two parallel measuring tubes containing flowing fluid oscillate in antiphase, acting like a tuning fork. The Coriolis forces produced at the measuring tubes cause a phase shift in the tube oscillations (see illustration):

- At zero flow (when the fluid is at a standstill) the two tubes oscillate in phase (1).
- Mass flow causes deceleration of the oscillation at the inlet of the tubes (2) and acceleration at the outlet (3).

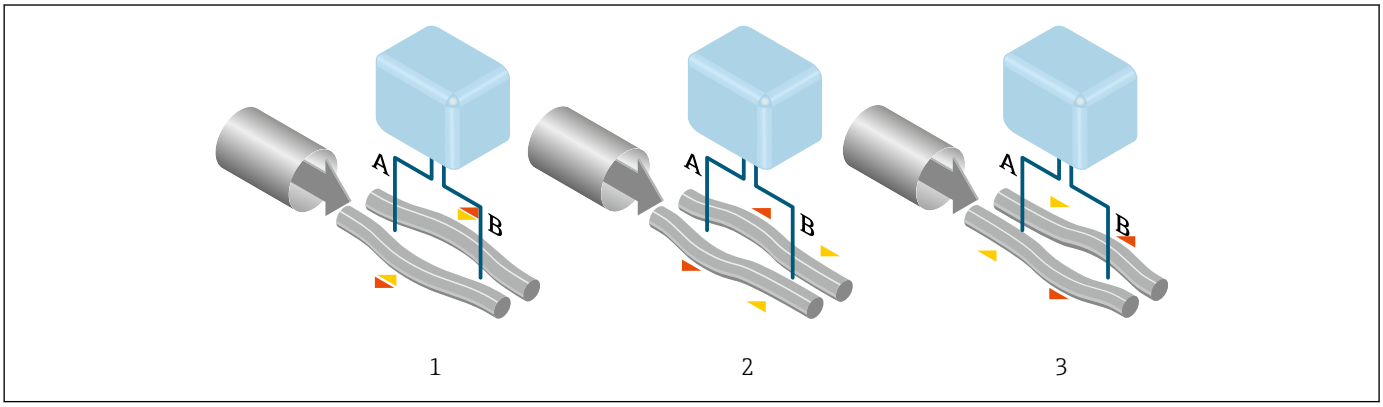

A0028850

The phase difference (A-B) increases with increasing mass flow. Electrodynamic sensors register the tube oscillations at the inlet and outlet. System balance is ensured by the antiphase oscillation of the two measuring tubes. The measuring principle operates independently of temperature, pressure, viscosity, conductivity and flow profile.

Density measurement
The measuring tube is continuously excited at its resonance frequency. A change in the mass and thus the density of the oscillating system (comprising measuring tube and fluid) results in a corresponding, automatic adjustment in the oscillation frequency. The resonance frequency is thus a function of the medium density. The microprocessor utilizes this relationship to obtain a density signal.

Volume measurement
Together with the measured mass flow, this is used to calculate the volume flow.

Temperature measurement
The temperature of the measuring tube is determined in order to calculate the compensation factor due to temperature effects. This signal corresponds to the process temperature and is also available as an output signal.

Gas Fraction Handler (GFH)
The Gas Fraction Handler is a software function that improves measurement stability and repeatability.
The function continuously checks for the presence of disturbances in single-phase flow, i.e. gas bubbles in liquids.
In the presence of the second phase, flow and density become increasingly unstable. The Gas Fraction Handler function improves measurement stability thanks to patented multifrequency technology.

Product design

The device consists of a transmitter and a sensor. A compact version of the device is available.

Compact version

The transmitter and sensor form a mechanical unit.

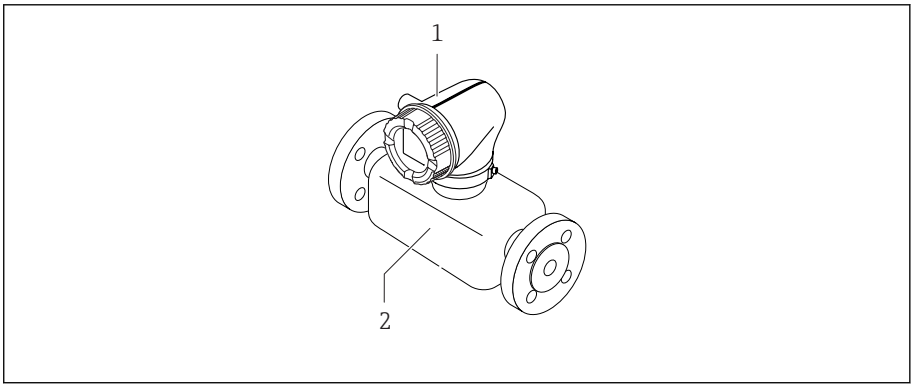

A0008262

1 Transmitter
2 Sensor

Measuring system

Proline 10 transmitter	Promass K sensor
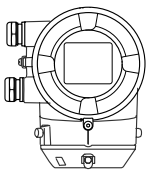 Compact version  Remote version	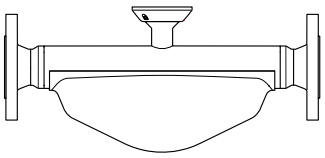 A0026712

IT security

We only provide a warranty if the device is installed and used as described in the Operating Instructions. The device is equipped with security mechanisms to protect it against any inadvertent changes to the device settings.

IT security measures in line with operators' security standards and designed to provide additional protection for the device and device data transfer must be implemented by the operators themselves.

Device-specific IT security

Access via Bluetooth

Secure signal transmission via Bluetooth uses an encryption method tested by the Fraunhofer Institute.

- Without the SmartBlue App, the device is not visible via Bluetooth.
- Only one point-to-point connection is established between the device and a smartphone or tablet.

Access via the SmartBlue app

Two access levels (user roles) are defined for the device: the **Operator** user role and the **Maintenance** user role. The **Maintenance** user role is configured when the device leaves the factory.

If a user-specific access code is not defined (in the Enter access code parameter), the default setting **0000** continues to apply and the **Maintenance** user role is automatically enabled. The device's configuration data are not write-protected and can be edited at all times.

If a user-specific access code has been defined (in the Enter access code parameter), all the parameters are write-protected. The device is accessed with the **Operator** user role. When the user-specific access code is entered a second time, the **Maintenance** user role is enabled. All parameters can be written to.

For detailed information, see the "Description of Device Parameters" document pertaining to the device.

Protecting access via a password

There are a variety of ways to protect against write access to the device parameters:

- User-specific access code:
  Protect write access to the device parameters via all the interfaces.
- Bluetooth key:
  The password protects access and the connection between an operating unit, e.g. a smartphone or tablet, and the device via the Bluetooth interface.

General notes on the use of passwords

- The access code and Bluetooth key that are valid when the device is delivered must be redefined during commissioning.
- Follow the general rules for generating a secure password when defining and managing the access code and Bluetooth key.
- The user is responsible for the management and careful handling of the access code and Bluetooth key.

Write protection switch

The entire operating menu can be locked via the write protection switch. The values of the parameters cannot be changed. Write protection is disabled when the device leaves the factory.

Write protection is enabled with the write protection switch on the back of the display module.

Input

Measured variable 14
Operable flow range 14
Measuring range 14

Measured variable

Direct measured variables	▪ Mass flow ▪ Temperature ▪ Density* * Visibility depends on order options or device settings
Calculated measured variables	▪ Volume flow ▪ Corrected volume flow

Operable flow range

Over 1000 : 1

Flow rates above the set end value do not overload the electronics. The totalized flow volume is measured correctly.

Measuring range

Measuring range for liquids

DN		Measuring range full scale values $\dot{m}_{min(F)}$ to $\dot{m}_{max(F)}$	
[mm]	[in]	[kg/h]	[lb/min]
8	⅜	0 to 2 000	0 to 73.50
15	½	0 to 6 500	0 to 238.9
25	1	0 to 18 000	0 to 661.5
40	1½	0 to 45 000	0 to 1 654
50	2	0 to 70 000	0 to 2 573
80	3	0 to 180 000	0 to 6 615

Measuring range for gases

The full scale value depends on the density and the sound velocity of the gas used and can be calculated with the formula below:
$\dot{m}_{max(G)}$ = minimum ($\dot{m}_{max(F)} \cdot \rho_G : x$; $m = rho_G \cdot (c_G/2) \cdot d_i^2 \cdot (\pi/4) \cdot n \cdot 3600$)

$\dot{m}_{max(G)}$	Maximum full scale value for gas [kg/h]
$\dot{m}_{max(F)}$	Maximum full scale value for liquid [kg/h]
$\dot{m}_{max(G)} < \dot{m}_{max(F)}$	$\dot{m}_{max(G)}$ can never be greater than $\dot{m}_{max(F)}$
ρ_G	Gas density in [kg/m³] at operating conditions
x	Limitation constant for max. gas flow [kg/m³]
m	Mass [kg/s]
rho_G	Density during operation [kg/m³]
c_G	Sound velocity (gas) [m/s]
d_i	Measuring tube internal diameter [m]
π	Pi
n	Number of pipes

DN		x
[mm]	[in]	[kg/m³]
8	⅜	85
15	½	110
25	1	125
40	1½	125
50	2	125
80	3	155

To calculate the measuring range, use the *Applicator* sizing tool → *Service-specific accessory* , 🖹 89

Calculation example for gas

- Sensor: Promass K, DN 50
- Gas: Air with a density of 60.3 kg/m³ (at 20 °C and 50 bar)
- Measuring range (liquid): 70 000 kg/h
- x = 125 kg/m³ (for Promass K, DN 50)

Maximum possible full scale value:

$\dot{m}_{max(G)} = \dot{m}_{max(F)} \cdot \rho_G : x = 70\,000 \text{ kg/h} \cdot 60.3 \text{ kg/m}^3 : 125 \text{ kg/m}^3 = 33\,800 \text{ kg/h}$

Output

Output versions 18
Output signal 18
Signal on alarm 21
Low flow cut off 21
Ex connection data 21
Galvanic isolation 21
Protocol-specific data 22

Output versions

Order code for 020: output; input	Output version
Option B	▪ Current output 4 to 20 mA HART ▪ Pulse/frequency/switch output
Option C	▪ Current output 4 to 20 mA HART Ex i ▪ Pulse/frequency/switch output Ex i
Option M	▪ Modbus RS485 ▪ Current output 4 to 20 mA
Option U	▪ Modbus RS485 Ex i ▪ Current output 4 to 20 mA Ex i

Output signal

Current output 4 to 20 mA HART

Signal mode	Choose via terminal assignment: ▪ Active ▪ Passive
Current range	Can be set to: ▪ 4 to 20 mA NAMUR ▪ 4 to 20 mA US ▪ 4 to 20 mA ▪ Fixed current
Max. output current	21.5 mA
Open-circuit voltage	DC < 28.8 V (active)
Max. input voltage	DC 30 V (passive)
Max. load	400 Ω
Resolution	1 µA
Damping	Configurable: 0 to 999.9 s
Assignable measured variables	▪ Mass flow ▪ Volume flow ▪ Corrected volume flow ▪ Temperature ▪ Density* ▪ Index inhomogeneous medium ▪ Exciter current ▪ Oscillation frequency ▪ Oscillation amplitude* ▪ Frequency fluctuation* ▪ Oscillation damping ▪ Oscillation damping fluctuation* ▪ Signal asymmetry ▪ HBSI* ▪ Electronic temperature * Visibility depends on order options or device settings

Modbus RS485

Physical interface	RS485 in accordance with EIA/TIA-485 standard

Current output 4 to 20 mA

Signal mode	Choose via terminal assignment: ▪ Active ▪ Passive
Current range	Can be set to: ▪ 4 to 20 mA NAMUR ▪ 4 to 20 mA US ▪ 4 to 20 mA ▪ Fixed current
Max. output current	21.5 mA
Open-circuit voltage	DC < 28.8 V (active)
Max. input voltage	DC 30 V (passive)
Max. load	400 Ω
Resolution	1 µA
Damping	Configurable: 0 to 999.9 s
Assignable measured variables	▪ Mass flow ▪ Volume flow ▪ Corrected volume flow ▪ Temperature ▪ Density* ▪ Index inhomogeneous medium ▪ Exciter current ▪ Oscillation frequency ▪ Oscillation amplitude* ▪ Frequency fluctuation* ▪ Oscillation damping ▪ Oscillation damping fluctuation* ▪ Signal asymmetry ▪ HBSI* ▪ Electronic temperature * Visibility depends on order options or device settings

Pulse/frequency/switch output

Function	Can be set to: ▪ Pulse output ▪ Frequency output ▪ Switch output
Version	Open collector: Passive
Input values	▪ DC 10.4 to 30 V ▪ Max. 140 mA
Voltage drop	▪ ≤ DC 2 V @ 100 mA ▪ ≤ DC 2.5 V @ max. input current

Pulse output	
Pulse width	Configurable: 0.05 to 2 000 ms
Max. pulse rate	10 000 Impulse/s
Pulse value	Configurable
Assignable measured variables	▪ Mass flow ▪ Volume flow ▪ Corrected volume flow

Frequency output	
Output frequency	Configurable: end value frequency 2 to 10 000 Hz (f_{max} = 12 500 Hz)
Damping	Configurable: 0 to 999.9 s
Pulse/pause ratio	1:1
Assignable measured variables	▪ Mass flow ▪ Volume flow ▪ Corrected volume flow ▪ Temperature ▪ Density* ▪ Index inhomogeneous medium ▪ Exciter current ▪ Oscillation frequency ▪ Oscillation amplitude* ▪ Frequency fluctuation* ▪ Oscillation damping ▪ Oscillation damping fluctuation* ▪ Signal asymmetry ▪ HBSI* ▪ Electronic temperature * Visibility depends on order options or device settings

Switch output	
Switching behavior	Binary, conductive or non-conductive
Switching delay	Configurable: 0 to 100 s
Number of switching cycles	Unlimited

Assignable functions	▪ Off
	▪ On
	▪ Diagnostic behavior:
	  ▪ Alarm
	  ▪ Warning
	  ▪ Warning and alarm
	▪ Limit value:
	  ▪ Mass flow
	  ▪ Volume flow
	  ▪ Corrected volume flow
	  ▪ Temperature
	  ▪ Density*
	  ▪ Totalizer 1…3
	  ▪ Oscillation damping
	▪ Flow direction monitoring
	▪ Status
	  ▪ Partially filled pipe detection
	  ▪ Low flow cut off
	* Visibility depends on order options or device settings

Signal on alarm

Output behavior in the event of a device alarm (failure mode)

HART

Device diagnostics	Device condition can be read out via HART Command 48

Modbus RS485

Failure mode	Selectable: ▪ NaN value instead of current value ▪ Last valid value

Current output 4 to 20 mA

4 to 20 mA	Selectable: ▪ Min. value: 3.59 mA ▪ Max. value: 21.5 mA ▪ Freely definable value between: 3.59 to 21.5 mA ▪ Actual value ▪ Last valid value

Pulse/frequency/switch output

Pulse output	Selectable: ▪ Actual value ▪ No pulses
Frequency output	Selectable: ▪ Actual value ▪ 0 Hz ▪ Defined value: 0 to 12 500 Hz
Switch output	Selectable: ▪ Current status ▪ Open ▪ Closed

Low flow cut off

The switch points for low flow cut off are user-selectable.

Ex connection data

Pay attention to the documentation on Ex connection values .

Safety-related values and intrinsically safe values: Safety Instructions (XA)

Galvanic isolation

The outputs are galvanically isolated from one another and from earth.

Protocol-specific data

HART

Bus structure	The HART signal overlays the 4 to 20 mA current output.
Manufacturer ID	0x11
Device type ID	0x72
HART protocol revision	7
Device description files (DTM, DD)	Information and files under: www.endress.com
HART load	At least 250 Ω
System integration	Measured variables via HART protocol

Modbus RS485

Physical interface	RS485 in accordance with EIA/TIA-485 standard
Terminating resistor	Not integrated
Protocol	Modbus Applications Protocol Specification V1.1
Response times	▪ Direct data access: typically 25 to 50 ms ▪ Auto-scan buffer (data range): typically 3 to 5 ms
Device type	Slave
Slave address range	1 to 247
Broadcast address range	0
Function codes	▪ 03: Read holding register ▪ 04: Read input register ▪ 06: Write single registers ▪ 08: Diagnostics ▪ 16: Write multiple registers ▪ 23: Read/write multiple registers
Broadcast messages	Supported by the following function codes: ▪ 06: Write single registers ▪ 16: Write multiple registers ▪ 23: Read/write multiple registers
Supported baud rate	▪ 1 200 BAUD ▪ 2 400 BAUD ▪ 4 800 BAUD ▪ 9 600 BAUD ▪ 19 200 BAUD ▪ 38 400 BAUD ▪ 57 600 BAUD ▪ 115 200 BAUD
Data transfer mode	RTU
Data access	Each parameter can be accessed via Modbus RS485. For Modbus register information
System integration	Information on system integration . ▪ Modbus RS485 information ▪ Function codes ▪ Register information ▪ Response time ▪ Modbus data map

Power supply

Terminal assignment 24
Supply voltage 24
Power consumption 24
Current consumption 24
Power supply failure 25
Electrical connection 25
Potential equalization 29
Terminals 29
Cable entries 29
Overvoltage protection 29

Terminal assignment

The terminal assignment is documented on an adhesive label.

The following terminal assignment is available:

Current output 4 to 20 mA HART (active) and pulse/frequency/switch output

Supply voltage		Output 1				Output 2	
1 (+)	2 (–)	26 (+)	27 (–)	24 (+)	25 (–)	22 (+)	23 (–)
L/+	N/–	Current output 4 to 20 mA HART (active)		–		Pulse/frequency/switch output (passive)	

Current output 4 to 20 mA HART (passive) and pulse/frequency/switch output

Supply voltage		Output 1				Output 2	
1 (+)	2 (–)	26 (+)	27 (–)	24 (+)	25 (–)	22 (+)	23 (–)
L/+	N/–	–		Current output 4 to 20 mA HART (passive)		Pulse/frequency/switch output (passive)	

Modbus RS485 and current output 4 to 20 mA (active)

Supply voltage		Output 1				Output 2	
1 (+)	2 (–)	26 (+)	27 (–)	24 (+)	25 (–)	22 (B)	23 (A)
L/+	N/–	Current output 4 to 20 mA (active)		–		Modbus RS485	

Modbus RS485 and current output 4 to 20 mA (passive)

Supply voltage		Output 1				Output 2	
1 (+)	2 (–)	26 (+)	27 (–)	24 (+)	25 (–)	22 (B)	23 (A)
L/+	N/–	–		Current output 4 to 20 mA (passive)		Modbus RS485	

Supply voltage

Order code for "Power supply"	Terminal voltage		Frequency range
Option **D**	DC 24 V	–20 to +30 %	–
Option **E**	AC 100 to 240 V	–15 to +10 %	50/60 Hz,±5 Hz
Option **I**	DC 24 V	–20 to +30 %	–
	AC 100 to 240 V	–15 to +10 %	50/60 Hz, ±5 Hz
Option **M** non-hazardous area	DC 24 V	–20 to +30 %	–
	AC 100 to 240 V	–15 to +10 %	50/60 Hz, ±5 Hz

Power consumption

- Transmitter: max. 10 W (active power)
- Switch-on current: max. 36 A (< 5 ms) as per NAMUR Recommendation NE 21

Current consumption

- Max. 400 mA (24 V)
- Max. 200 mA (110 V, 50/60 Hz; 230 V, 50/60 Hz)

Power supply failure

- Totalizers stop at the last value measured.
- Device configuration remains unchanged.
- Error messages (incl. total operated hours) are stored.

Electrical connection

Transmitter terminal connections

Terminal assignment → *Terminal assignment*, 24

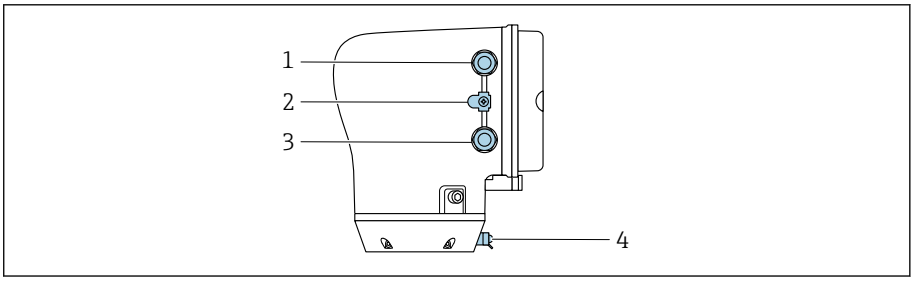

A0043283

1 Cable entry for power supply cable: supply voltage
2 Outer ground terminal: on transmitters made of polycarbonate with a metal pipe adapter
3 Cable entry for signal cable
4 Outer ground terminal

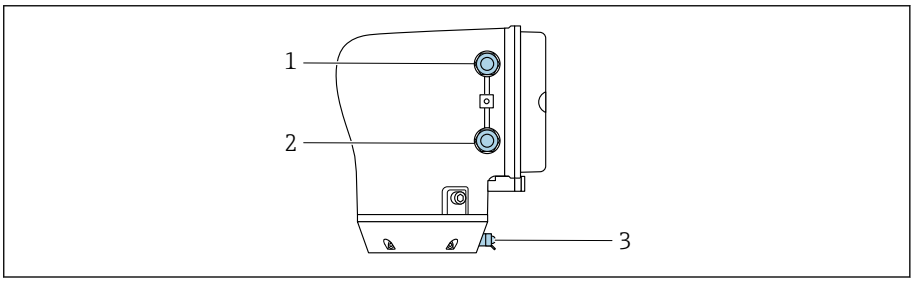

A0045438

1 Cable entry for power supply cable: supply voltage
2 Cable entry for signal cable
3 Outer ground terminal

Examples for electric terminals

Current output 4 to 20 mA HART (active)

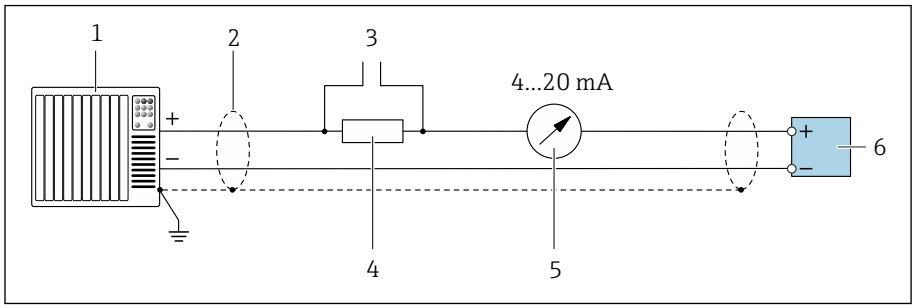

1 *Automation system with current input (e.g. PLC)*
2 *Cable shield*
3 *Connection for HART operating devices*
4 *Resistor for HART communication (≥ 250 Ω): observe max. load*
5 *Analog display unit: observe max. load.*
6 *Transmitter*

Current output 4 to 20 mA HART (passive)

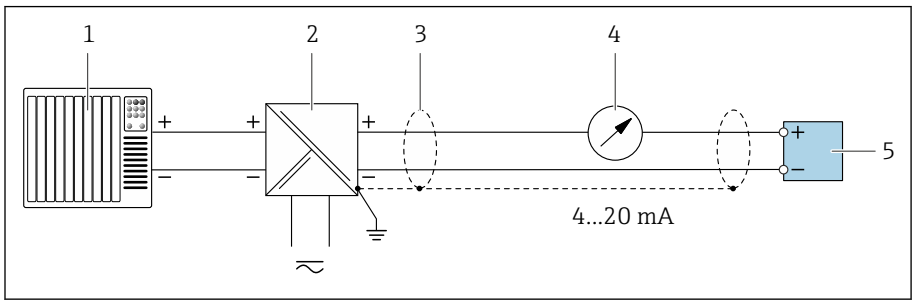

1 *Automation system with current input (e.g. PLC)*
2 *Active barrier for supply voltage (e.g. RN221N)*
3 *Cable shield*
4 *Analog display unit: observe max. load*
5 *Transmitter*

HART input (passive)

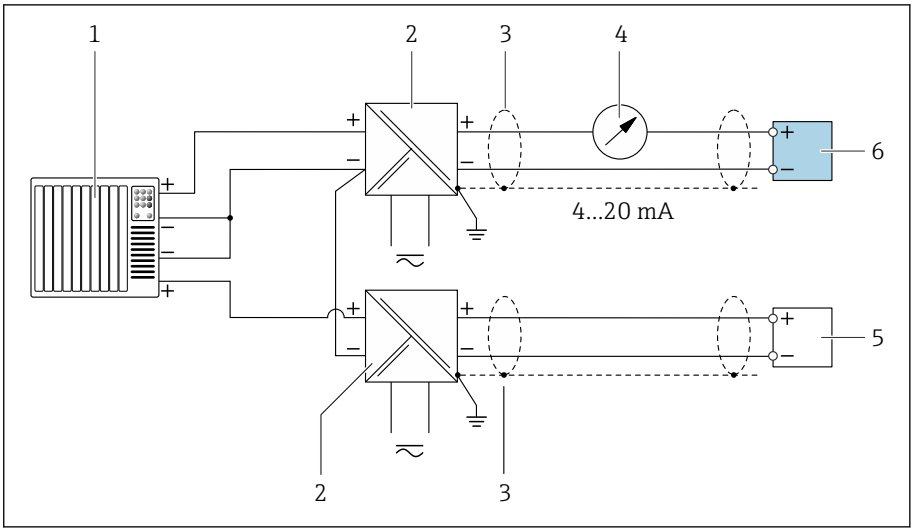

1 Connection example for HART input with a common negative (passive)

1 *Automation system with current input (e.g. PLC)*
2 *Active barrier for supply voltage (e.g. RN221N)*
3 *Cable shield*
4 *Analog display unit: observe max. load*
5 *Pressure transmitter (e.g. Cerabar M, Cerabar S: see requirements)*
6 *Transmitter*

Modbus RS485

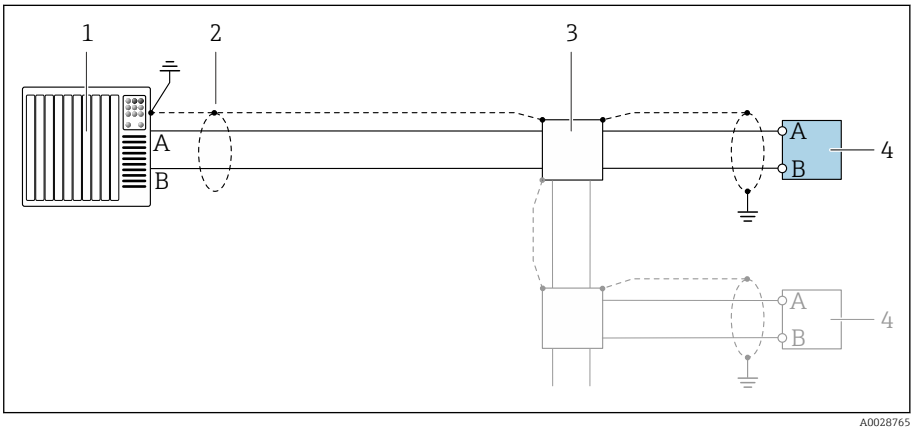

2 Connection example for Modbus RS485, non-hazardous area and Zone 2; Class I, Division 2

1 *Control system (e.g. PLC)*
2 *Cable shield*
3 *Distribution box*
4 *Transmitter*

Current output 4 to 20 mA (active)

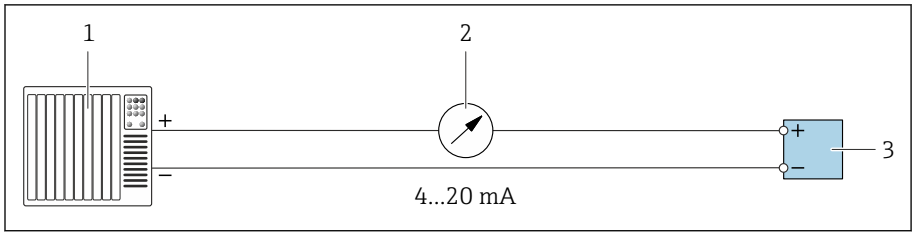

1 Automation system with current input (e.g. PLC)
2 Analog display unit: observe max. load
3 Transmitter

Current output 4 to 20 mA (passive)

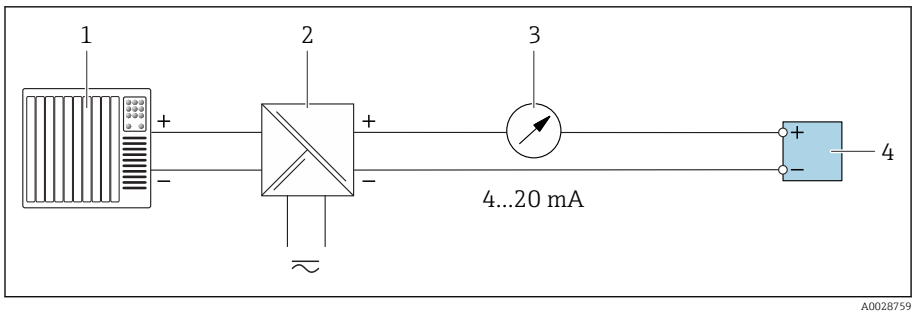

1 Automation system with current input (e.g. PLC)
2 Active barrier for supply voltage (e.g. RN221N)
3 Analog display unit: observe max. load
4 Transmitter

Pulse/frequency output (passive)

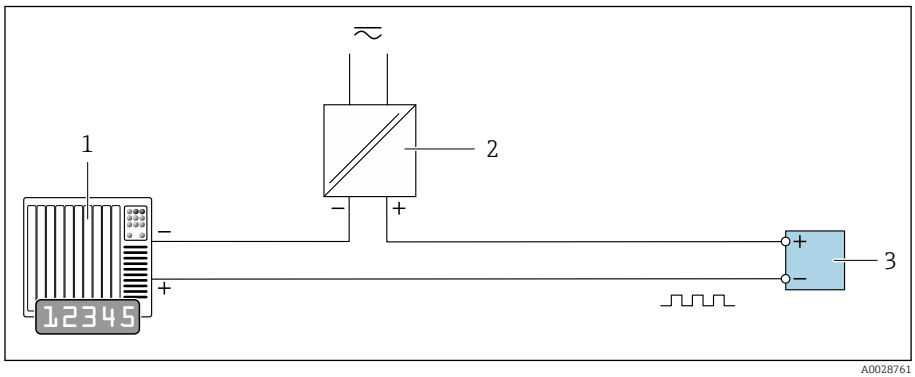

1 Automation system with pulse output and frequency input (e.g. PLC with a 10 kΩ pull-up or pull-down resistor)
2 Supply voltage
3 Transmitter: observe input values

Switch output (passive)

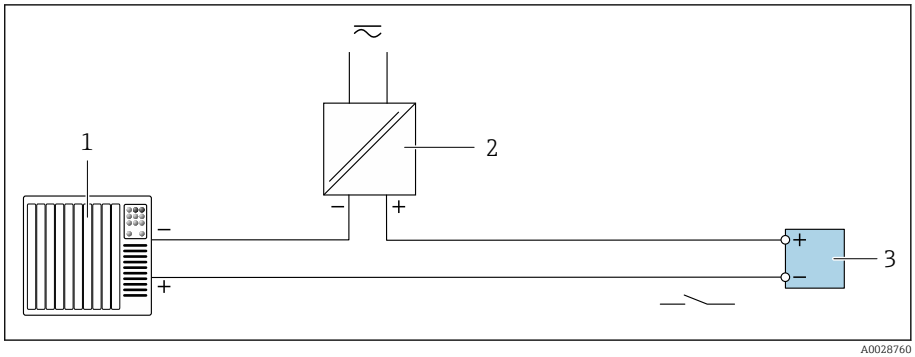

1 *Automation system with switch input (e.g. PLC with a 10 kΩ pull-up or pull-down resistor)*
2 *Supply voltage*
3 *Transmitter: observe input values*

Potential equalization

No special measures for potential equalization are required.

For devices intended for use in hazardous areas, observe the instructions in the Ex documentation (XA).

Terminals

Spring terminals
- Suitable for strands and strands with ferrules.
- Conductor cross-section 0.2 to 2.5 mm² (24 to 12 AWG).

Cable entries

- Cable gland: M20 × 1.5 for cable Ø6 to 12 mm (0.24 to 0.47 in)
- Thread for cable entry:
  - NPT ½"
  - G ½", G ½" Ex d
  - M20

Overvoltage protection

Mains voltage fluctuations	→ *Supply voltage*, 24
Overvoltage category	Overvoltage category II
Short-term, temporary overvoltage	Between cable and neutral conductor up to 1200 V for max. 5s
Long-term, temporary overvoltage	Up to 500 V between cable and ground

Cable specification

Requirements for connecting cable 32

Requirements for connecting cable

Electrical safety

As per applicable national regulations.

Permitted temperature range

- Observe the installation guidelines that apply in the country of installation.
- The cables must be suitable for the minimum temperatures and maximum temperatures to be expected.

Power supply cable (incl. conductor for the inner ground terminal)

- A standard installation cable is sufficient.
- Provide grounding according to applicable national codes and regulations.

Signal cable

- Current output 4 to 20 mA HART:
  A shielded cable is recommended, observe the grounding concept of the facility.
- Pulse/frequency/switch output:
  Standard installation cable
- Modbus RS485:
  Cable type A according to EIA/TIA-485 standard is recommended
- Current output 4 to 20 mA:
  Standard installation cable

Performance characteristics

Reference operating conditions 34
Maximum measured error 34
Repeatability 35
Response time 35
Influence of ambient temperature 35
Influence of medium temperature 35
Influence of medium pressure 36
Design fundamentals 36

Reference operating conditions

- Error limits based on ISO 11631
- Water with +15 to +45 °C (+59 to +113 °F) at 2 to 6 bar (29 to 87 psi)
- Data as indicated in the calibration protocol
- Accuracy based on accredited calibration rigs according to ISO 17025

To obtain measured errors, use the *Applicator* sizing tool → *Service-specific accessory* , 🖹 89

Maximum measured error

o.r. = of reading; 1 g/cm³ = 1 kg/l; T = medium temperature

Base accuracy

→ *Design fundamentals*, 🖹 36

Mass flow and volume flow (liquids)	±0.5 % o.r. ▪ Order code for "Calibration flow" option G: ±0.2 % ▪ Order code for "Calibration flow" option O: ±0.15 %
Mass flow (gases)	±0.75 % o.r.
Density (liquids)	Only devices with the order code for "Application package", option EF ▪ Under reference operating conditions: ±0.0005 g/cm³ ▪ Standard density calibration: ±0.003 g/cm³ Valid over the entire temperature and density range
Temperature	±0.5 °C ± 0.005 · T °C (±0.9 °F ± 0.003 · (T − 32) °F)

Zero point stability

DN		Zero point stability	
[mm]	[in]	[kg/h]	[lb/min]
8	⅜	0.20	0.007
15	½	0.65	0.024
25	1	1.80	0.066
40	1½	4.50	0.165
50	2	7.0	0.257
80	3	18.0	0.6615

Flow values

Flow values as turndown parameters depending on nominal diameter.

SI units	DN	1:1	1:10	1:20	1:50	1:100	1:500
	[mm]	[kg/h]	[kg/h]	[kg/h]	[kg/h]	[kg/h]	[kg/h]
	8	2 000	200	100	40	20	4
	15	6 500	650	325	130	65	13
	25	18 000	1 800	900	360	180	36
	40	45 000	4 500	2 250	900	450	90
	50	70 000	7 000	3 500	1 400	700	140
	80	180 000	18 000	9 000	3 600	1 800	360

US units	DN [inch]	1:1 [lb/min]	1:10 [lb/min]	1:20 [lb/min]	1:50 [lb/min]	1:100 [lb/min]	1:500 [lb/min]
	⅜	73.50	7.350	3.675	1.470	0.735	0.147
	½	238.9	23.89	11.95	4.778	2.389	0.478
	1	661.5	66.15	33.08	13.23	6.615	1.323
	1½	1654	165.4	82.70	33.08	16.54	3.308
	2	2573	257.3	128.7	51.46	25.73	5.146
	3	6615	661.5	330.8	132.3	66.15	13.23

Accuracy of outputs

Current output	±5 µA
Pulse/frequency output	Max. ±100 ppm o. r. (across the entire ambient temperature range)

Repeatability

o.r. = of reading; T = medium temperature

→ *Design fundamentals*, 🖹 36

Mass flow (liquids)	±0.1 % o.r.
Mass flow (gases)	±0.5 % o.r.
Density (liquids)	Only devices with the order code for "Application package", option EF ±0.00025 g/cm³ (1 kg/l)
Temperature	±0.25 °C ± 0.0025 · T °C (±0.45 °F ± 0.0015 · (T−32) °F)

Response time

The response time depends on the configuration (damping).

Influence of ambient temperature

Current output	Temperature coefficient max. 1 µA/°C
Pulse/frequency output	No additional effect. Is included in the accuracy.

Influence of medium temperature

o.f.s. = of full scale value

Mass flow and volume flow

- When there is a difference between the temperature for zero point adjustment and the process temperature, the additional measured error of the sensor is typically ±0.0002 % o.f.s./°C (±0.0001 % o. f.s./°F).
- The effect is reduced if zero point adjustment is performed at process temperature.

Density

When there is a difference between the density calibration temperature and the process temperature, the typical measured error of the sensor is ±0.0001 g/cm³ /°C (±0.00005 g/cm³ /°F). Field density calibration is possible.

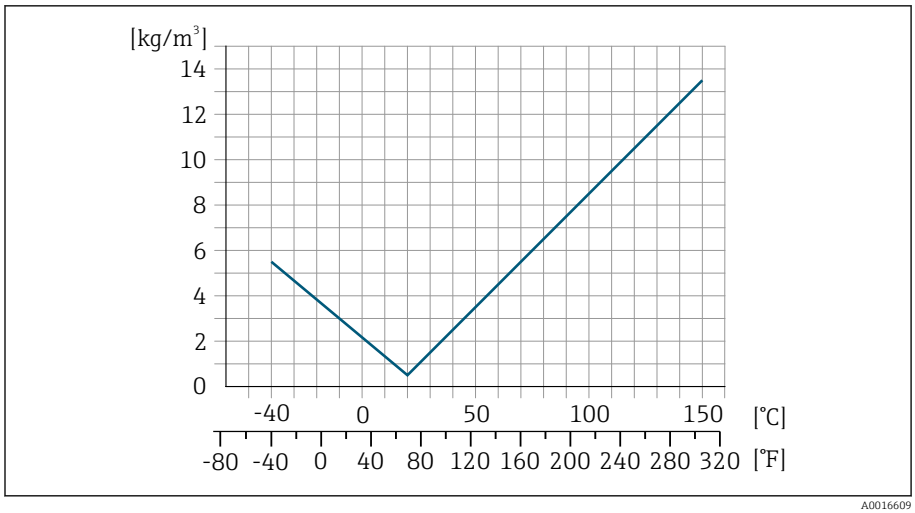

3 Field density calibration, for example at +20 °C (+68 °F)

Temperature

±0.005 · T °C (± 0.005 · (T − 32) °F)

Influence of medium pressure

o.r. = of reading

The table below shows the effect of a difference in pressure between the calibration pressure and process pressure on the accuracy with mass flow.

It is possible to compensate for the effect by:
- Reading in the current pressure measured value via the current input.
- Specifying a fixed value for the pressure in the device parameters.

DN		[% o.r./bar]	[% o.r./psi]
[mm]	[in]		
8	⅜	no influence	
15	½	no influence	
25	1	no influence	
40	1½	no influence	
50	2	−0.009	−0.0006
80	3	−0.020	−0.0014

Design fundamentals

o.r. = of reading

BaseAccu = base accuracy as % o.r

BaseRepeat = base repeatability as % o.r.

MeasValue = measured value

ZeroPoint = zero point stability

Calculation of the maximum measured error as a function of the flow rate

Flow rate	$\geq \frac{\text{ZeroPoint}}{\text{BaseAccu}} \cdot 100$	$< \frac{\text{ZeroPoint}}{\text{BaseAccu}} \cdot 100$
Maximum measured error in % o.r.	± BaseAccu	$\pm \frac{\text{ZeroPoint}}{\text{MeasValue}} \cdot 100$

Example for maximum measured error

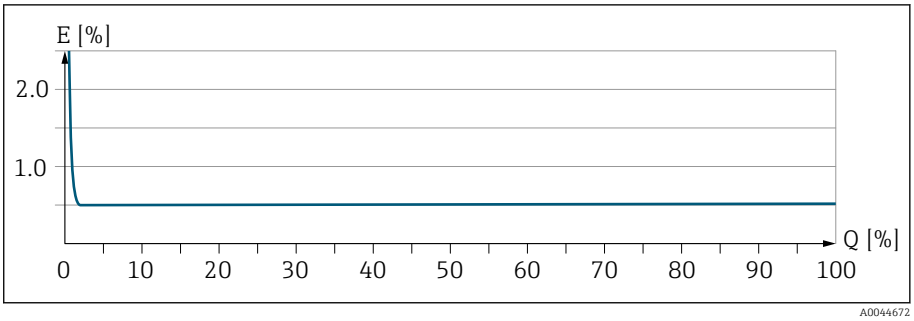

E Maximum measured error in % o.r. (example)
Q Flow rate in % of maximum full scale value

Calculation of the maximum repeatability as a function of the flow rate

Flow rate	$\geq \frac{½ \cdot \text{ZeroPoint}}{\text{BaseRepeat}} \cdot 100$	$< \frac{½ \cdot \text{ZeroPoint}}{\text{BaseRepeat}} \cdot 100$
Maximum measured error in % o.r.	± BaseRepeat	$\pm ½ \cdot \frac{\text{ZeroPoint}}{\text{MeasValue}} \cdot 100$

Installation

Installation conditions 40

Installation conditions

Flow direction

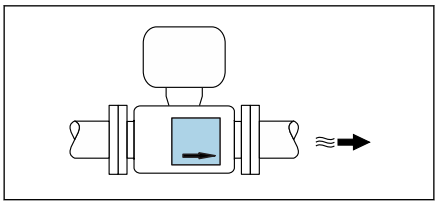

A0041163

Install the device in the direction of flow.

Note the direction of arrow on the nameplate.

Inlet runs and outlet runs

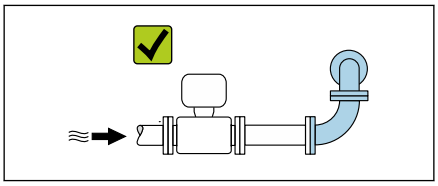

A0029323

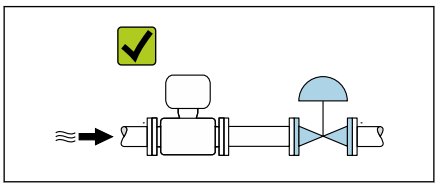

A0029322

If no cavitation effects occur, requirements regarding inlet and outlet runs do not need to be considered during the installation.
To avoid negative pressure, install the sensor upstream from assemblies that produce turbulence, e.g. valves, T-sections, and downstream from pumps .

Orientations

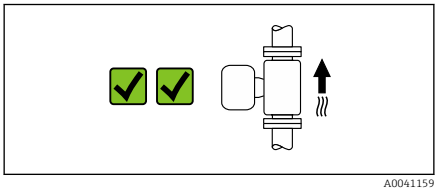

A0041159

Vertical orientation, upward direction of flow
For all applications e.g. self-draining applications

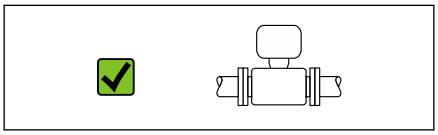

A0041160

Horizontal orientation, transmitter at top
- For applications with low process temperatures in order to maintain the minimum ambient temperature for the transmitter.
- For outgassing media in order to avoid the accumulation of gas.

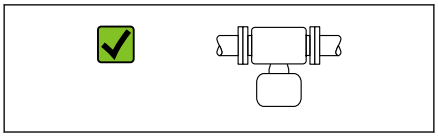

A0041161

Horizontal orientation, transmitter at bottom
- For applications with high process temperatures in order to maintain the maximum ambient temperature for the transmitter.
- For media with entrained solids in order to avoid the accumulation of solids.

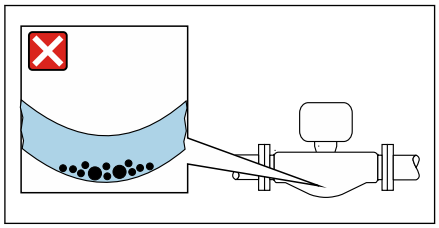
A0043063

Horizontal orientation, transmitter with measuring pipe curved downwards
Match the sensor position to the medium properties.
Not suitable for media with entrained solids: solids may accumulate.

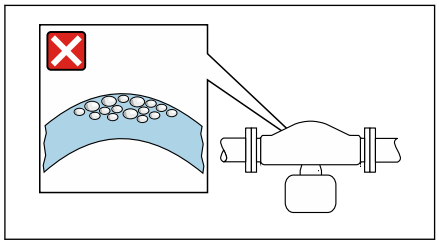
A0044717

Horizontal orientation, transmitter with measuring pipe curved upwards
Match the sensor position to the medium properties.
Not suitable for outgassing media: gas may accumulate.

Mounting locations

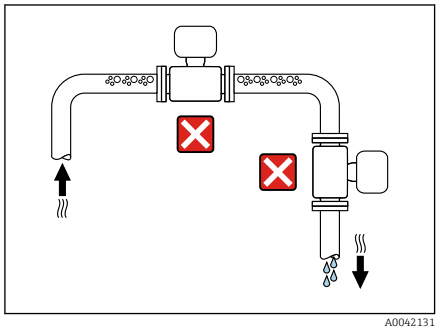
A0042131

- Do not install the device at the highest point of the pipe.
- Do not install the device upstream from a free pipe outlet in a down pipe.

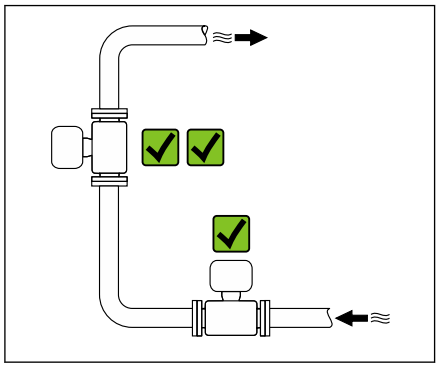
A0042317

The device should ideally be installed in an ascending pipe.

Installation near control valves

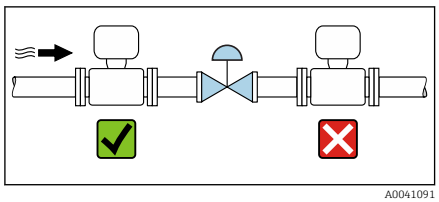
A0041091

Install the device in the direction of flow upstream from the control valve.

Installation in a down pipe

Installation suggestion for installation in an open down pipe, e.g. for bottling applications. A pipe restriction or the use of an orifice plate with a smaller cross-section than the nominal diameter prevent the sensor running empty while measurement is in progress.

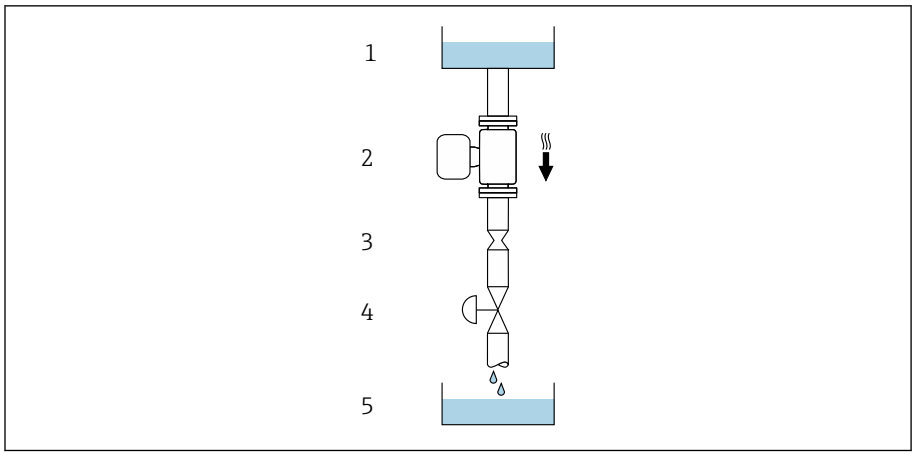

1 *Supply tank*
2 *Sensor*
3 *Orifice plate or pipe restriction*
4 *Valve*
5 *Batching tank*

DN		Ø orifice plate, pipe restriction	
[mm]	[in]	[mm]	[in]
8	⅜	6	0.24
15	½	10	0.40
25	1	14	0.55
40	1½	22	0.87
50	2	28	1.10
80	3	50	1.97

Rupture disk

Information that is relevant to the process → *Rupture disk*, 📄 51.

⚠ WARNING

A missing or damaged rupture disk can put staff at risk!
Medium escaping under pressure can cause serious injury or material damage.
- ▶ Ensure that any danger to persons or material damage is ruled out if the rupture disk is actuated.
- ▶ Observe information on the rupture disk sticker.
- ▶ Make sure that the function and operation of the rupture disk is not impeded during the installation of the device.
- ▶ Do not use a heating jacket.
- ▶ Do not remove or damage the rupture disk.

- ▶ After the rupture disk is actuated, do not operate the device any longer.

The position of the rupture disk is indicated by a sticker affixed to the device. If the rupture disk is triggered, the sticker is destroyed. The disk can therefore be visually monitored.

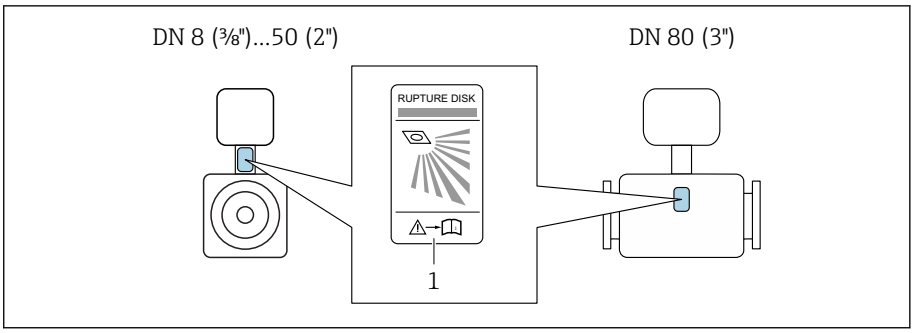

A0029956

1 Rupture disk sticker

Sensor thermal insulation

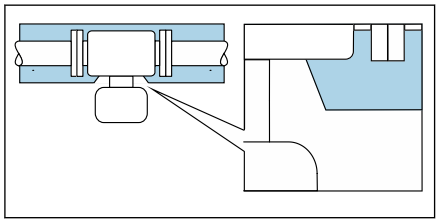

A0044122

NOTICE

If the meter electronics overheat this can damage the device!

- ▶ Keep the housing support completely free (heat dissipation).

- ▶ Provide insulation but make sure it does not go beyond the upper edge of the two sensor half-shells.

Heating

NOTICE

Ambient temperature too high!

If the electronics overheat this can damage the transmitter housing.

- ▶ Do not exceed the permissible temperature range for the ambient temperature.
- ▶ Use a weather protection cover.

- ▶ Mount the device correctly.

Heating options

- Electrical heating, e.g. with electric band heaters [1)]
- Via pipes carrying hot water or steam
- Via heating jackets

Heating jackets for the sensors can be ordered as accessories from Endress +Hauser: .

Outdoor use

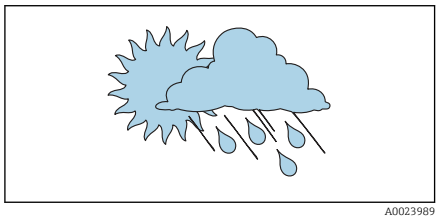

A0023989

- Avoid exposure to direct sunlight.
- Install in a location protected from sunlight.
- Avoid direct exposure to weather conditions.
- Use a weather protection cover → *Transmitter*, 88.

1) The use of parallel electric band heaters is generally recommended (bidirectional electricity flow). Particular considerations must be made if a single-wire heating cable is to be used. Additional information is provided in the document EA01339D "Installation instructions for electrical trace heating systems" → *Associated documentation*, 6

Environment

Ambient temperature range 46
Storage temperature 46
Atmosphere 46
Climate class 46
Degree of protection 46
Vibration-resistance and shock-resistance 46
Electromagnetic compatibility (EMC) 46
Interior cleaning 46

Ambient temperature range

Transmitter and sensor	–40 to +60 °C (–40 to +140 °F)
Local display	–20 to +60 °C (–4 to +140 °F) The readability of the display may be impaired at temperatures outside the temperature range.

Dependency of ambient temperature on medium temperature → *Medium temperature range*, 48

If using the device in hazardous areas, observe the "Safety Instructions" documentation.

Storage temperature

The storage temperature corresponds to the ambient temperature range of the transmitter and sensor.

Atmosphere

According to IEC 60529: If a plastic housing is permanently exposed to certain steam and air mixtures, this can damage the housing.

More Informationen: Endress+Hauser sales organizations.

Climate class

DIN EN 60068-2-38 (test Z/AD)

Degree of protection

Transmitter	▪ IP66/67, Type 4X enclosure, suitable for pollution degree 4 ▪ Open housing: IP20, Type 1 enclosure, suitable for pollution degree 2
Sensor	IP66/67, Type 4X enclosure, suitable for pollution degree 4

Vibration-resistance and shock-resistance

Vibration, sinusoidal ▪ Following IEC 60068-2-6 ▪ 20 cycles per axis	2 to 8.4 Hz 8.4 to 2 000 Hz	3.5 mm peak 1 g peak
Vibration, broad-band random ▪ Following IEC 60068-2-64 ▪ 120 min per axis	10 to 200 Hz 200 to 2 000 Hz	0.003 g^2/Hz 0.001 g^2/Hz (1.54 g rms)
Shocks, half-sine ▪ Following IEC 60068-2-27 ▪ 3 positive and 3 negative shocks	6 ms 30 g	

Shock
Due to rough handling according to IEC 60068-2-31.

Electromagnetic compatibility (EMC)

As per IEC/EN 61326 and NAMUR Recommendation NE 21.

For more information: Declaration of Conformity

Interior cleaning

Available methods of internal cleaning:
- Cleaning in place (CIP)
- Sterilization in place (SIP)

Process

Medium temperature range 48
Density 48
Flow limit 48
Pressure-temperature ratings 48
Sensor housing 51
Rupture disk 51
Pressure loss 52

Medium temperature range

−40 to +150 °C (−40 to +302 °F)

Density

0 to 5 000 kg/m³ (0 to 312 lb/cf)

Flow limit

Select the nominal diameter by optimizing between the required flow range and permissible pressure loss.

For an overview of the measuring range full scale values: → *Measuring range*, 14

- The minimum recommended full scale value is approx. 1/20 of the maximum full scale value
- For the most common applications, 20 to 50 % of the maximum full scale value can be considered ideal
- A low full scale value must be selected for abrasive media (such as liquids with entrained solids): flow velocity < 1 m/s (< 3 ft/s).
- For gas measurement the following rules apply:
  - The flow velocity in the measuring pipes should not exceed half the sound velocity (0.5 Mach).
  - The maximum mass flow depends on the density of the gas: formula → *Measuring range for gases* , 14

To calculate the flow limit, use the *Applicator* sizing tool → *Service-specific accessory* , 89

Pressure-temperature ratings

Maximum permitted medium pressure as a function of the medium temperature.

The data relate to all pressure bearing parts of the device.

Flange according to EN 1092-1

Flange material 1.4404 (F316/F316L)

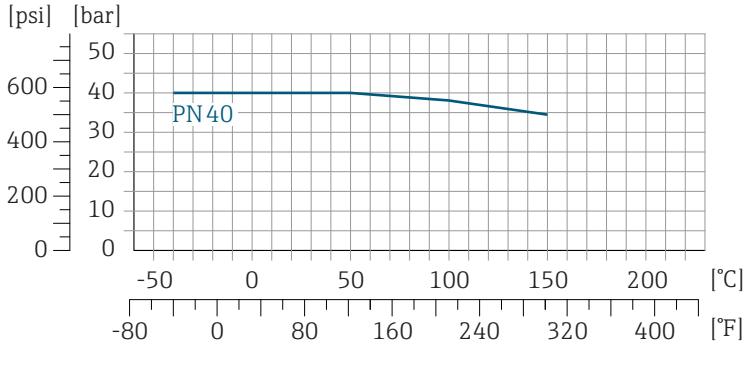

Flange according to ASME B16.5

Flange material 1.4404 (F316/F316L)

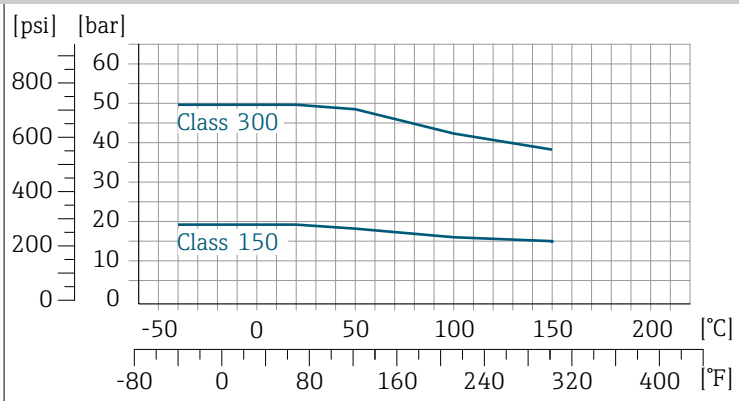

Fixed flange JIS B2220

Flange material 1.4404 (F316/F316L)

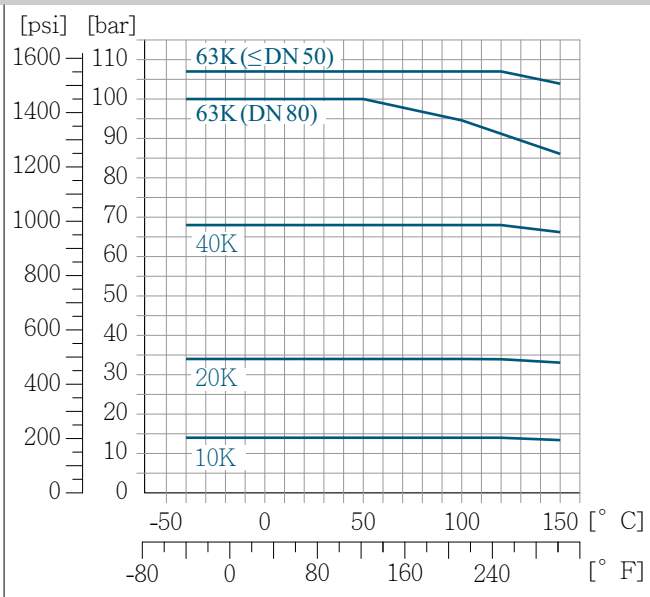

Flange DIN 11864-2 Form A

Flange material 1.4404 (F316/F316L)

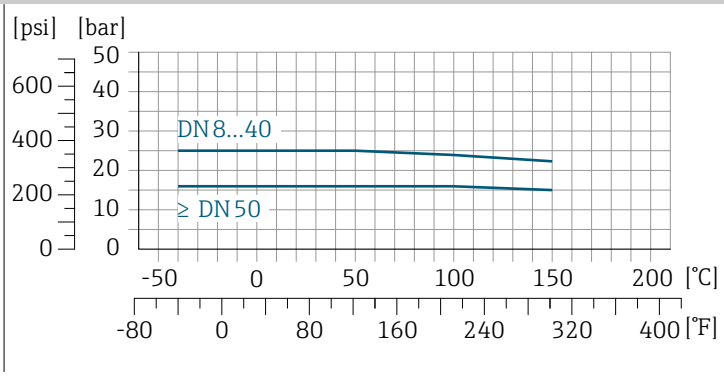

Thread DIN 11864-1 Form A

Connection material 1.4404 (F316/F316L)

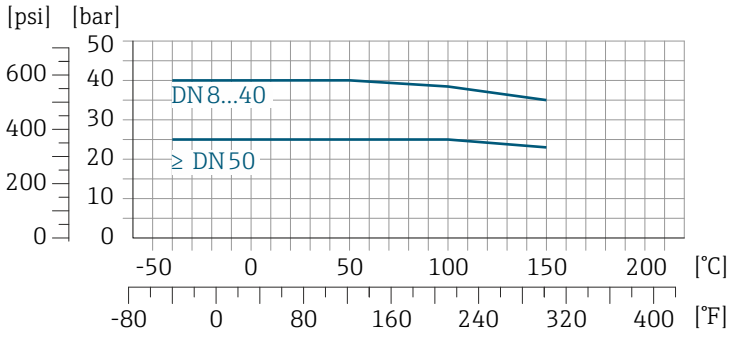

A0029848-EN

Thread DIN 11851

Connection material 1.4404 (F316/F316L)

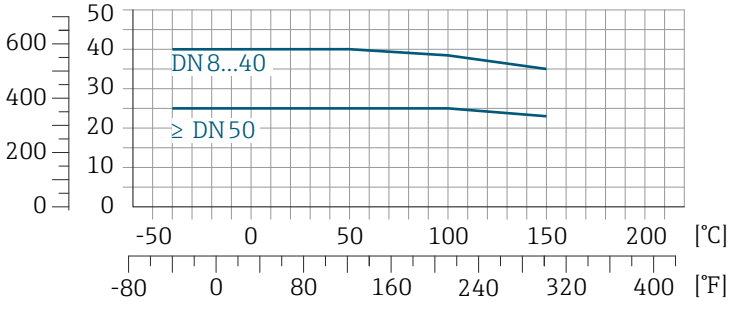

A0029848-EN

DIN 11851 allows for applications up to +140 °C (+284 °F) if suitable sealing materials are used. Please take this into account when selecting seals and counterparts, as these components can limit the pressure and temperature range.

Thread ISO 2853

Connection material 1.4404 (F316/F316L)

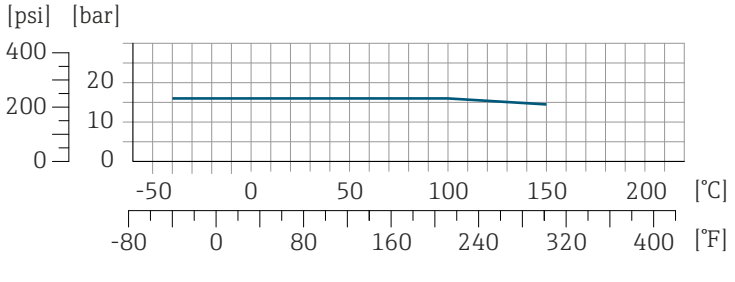

A0029853-EN

Thread SMS 1145

Connection material 1.4404 (F316/F316L)

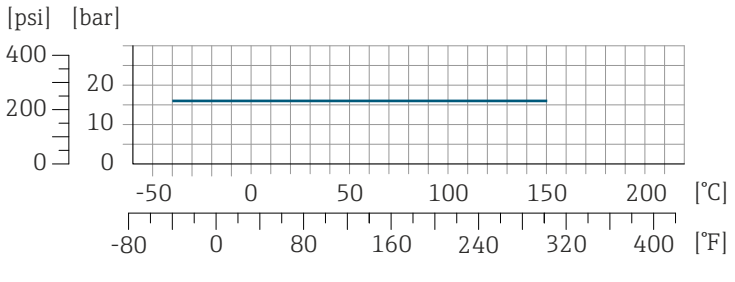

A0032218-EN

Tri-Clamp

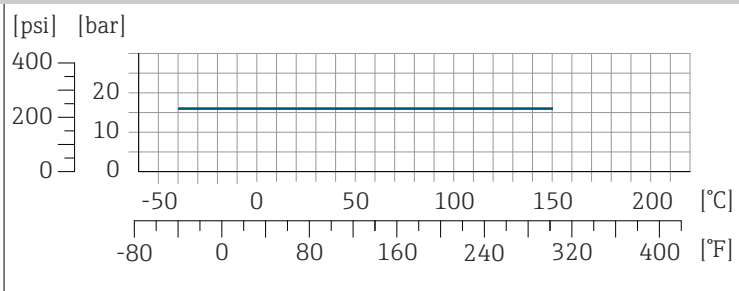

The clamp connections are suitable up to a maximum pressure of 16 bar (232 psi). Please observe the operating limits of the clamp and seal used, as they can be over 16 bar (232 psi). The clamp and seal are not included in the scope of supply.

Sensor housing

The sensor housing is filled with dry nitrogen gas and protects the electronics and mechanics inside.

If a measuring pipe fails , e.g. due to process characteristics like corrosive or abrasive media, the medium will be contained by the sensor housing.

If a measuring pipe fails, the pressure level inside the sensor housing will rise according to the operating pressure. If the user judges that the sensor housing burst pressure does not provide an adequate safety margin, the device can be fitted with a rupture disk. The rupture disk prevents excessively high pressure from forming inside the sensor housing. The rupture disk is urgently recommended in the following applications:

- For high gas pressures
- Process pressure is higher than 2/3 of the burst pressure of the sensor housing.

Sensor housing burst pressure

If the device is fitted with a rupture disk (order code for "Sensor option", option CA "Rupture disk"), the rupture disk trigger pressure is decisive .

The sensor housing burst pressure refers to a typical internal pressure which is reached prior to mechanical failure of the sensor housing and which was determined during type testing. The corresponding type test declaration can be ordered with the device (order code for "Additional approval", option LN "Sensor housing burst pressure, type test").

DN		Sensor housing burst pressure	
[mm]	[in]	[bar]	[psi]
8	⅜	250	3 620
15	½	250	3 620
25	1	250	3 620
40	1½	200	2 900
50	2	180	2 610
80	3	120	1 740

For information on the dimensions: see the "Mechanical construction" section
→ *Mechanical construction* , 54.

Rupture disk

- Order code for "Sensor option", option CA
- Trigger pressure: 10 to 15 bar (145 to 217.5 psi)

The use of a rupture disk cannot be combined with a heating jacket.

Pressure loss

To calculate the pressure loss, use the *Applicator* sizing tool → *Service-specific accessory* , 📄 89

Mechanical construction

Weight 54
Materials 55
Process connections 55
Surface roughness 55

Weight

All values refer to devices with EN/DIN PN 40 flanges
Weight information including transmitter as per order code for "Housing", option A "Aluminum, coated".

Different values due to different transmitter versions:
Transmitter version for the hazardous area:+1 kg (+2.2 lbs)
Transmitter version, order code for "Housing", option M "Polycarbonate": −1 kg (−2.2 lbs)

Weight in SI units

DN [mm]	Weight [kg]
8	6
15	6.5
25	8
40	12
50	17
80	33

Weight in US units

DN [in]	Weight [lbs]
3/8	13
½	14
1	18
1 ½	26
2	37
3	73

Materials

Transmitter housing	
Order code for "Housing"	▪ Option A: aluminum, AlSi10Mg, coated ▪ Option M: polycarbonate
Window material	▪ Order code for "Housing" option A: glass ▪ Order code for "Housing" option M: polycarbonate
Cable glands and entries	
Cable gland M20×1.5	▪ Non-hazardous area: plastic ▪ Hazardous area: brass
Adapter for cable entry with female thread G ½" or NPT ½"	Nickel-plated brass
Sensor housing	
	▪ Acid and alkali-resistant outer surface ▪ Stainless steel 1.4301 (304)
Measuring tubes	
	Stainless steel: 1.4539 (904L) Manifold: stainless steel, 1.4404 (316L)
Seals	
	Welded process connections without internal seals
Process connections	
▪ EN 1092-1 (DIN 2501) ▪ ASME B16.5 ▪ JIS B2220	Stainless steel, 1.4404 (F316/F316L)
Other process connections	Stainless steel, 1.4404 (316/316L)
Accessories	
Protective cover	Stainless steel, 1.4404 (316L)

Process connections

- Fixed flange connections:
  - EN 1092-1 (DIN 2501) flange
  - ASME B16.5 flange
  - JIS B2220 flange
  - DIN 11864-2 Form A flange, DIN 11866 series A, flange with notch
- Clamp connections:
  Tri-Clamp (OD tubes), DIN 11866 series C
- Thread:
  - DIN 11851 thread, DIN 11866 series A
  - SMS 1145 thread
  - ISO 2853 thread, ISO 2037
  - DIN 11864-1 Form A thread, DIN 11866 series A

Surface roughness

All data relate to parts in contact with medium. The following surface roughnesses can be ordered:

- Not polished
- Ra_{max} = 0.76 µm (30 µin)

Dimensions in SI units

Compact version 58
Order code for "Housing", option A "Aluminum, coated" 58
Order code for "Housing", option A "Aluminum, coated"; Zone 1 59
Order code for "Housing", option M "Polycarbonate" 60

Fixed flange 61
Flange according to EN 1092-1 (DIN 2501): PN 40 61
Flange according to ASME B16.5: Class 150 62
Flange according to ASME B16.5: Class 300 62
Flange JIS B2220: 20K 63
Flange JIS B2220: 40K 63
Flange DIN 11864-2 Form A, flange with notch 64

Clamp connections 65
Tri-Clamp 65

Couplings 66
Thread according to DIN 11851 66
Thread according to DIN 11864-1 Form A 66
Thread according to SMS 1145 67
Thread according to ISO 2853 67

Accessories 68
Protective cover 68

Compact version

Order code for "Housing", option A "Aluminum, coated"

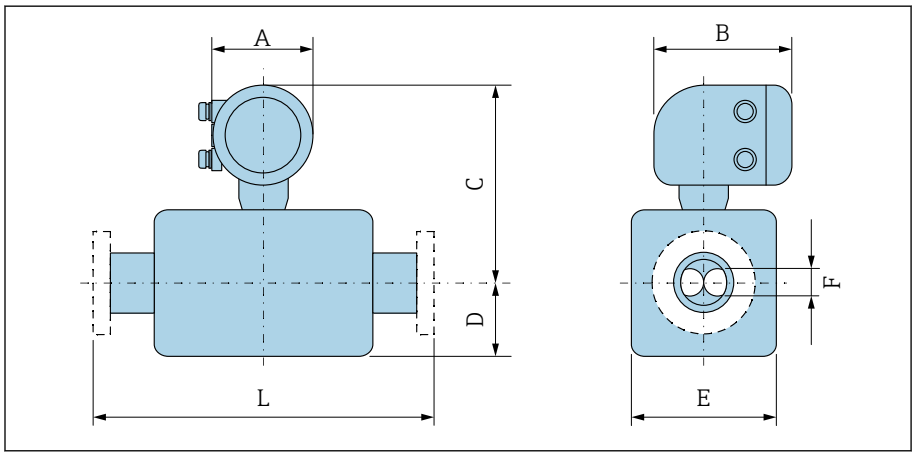

The dimension L depends on the specific process connection:

DN [mm]	A [1] [mm]	B [mm]	C [mm]	D [mm]	E [mm]	F [mm]
8	139	178	254	89	45	5.35
15	139	178	254	100	45	8.30
25	139	178	251	102	51	12.0
40	139	178	257	121	65	17.6
50	139	178	271	175.5	95	26.0
80	139	178	291	205	127	40.5

1) Depending on the cable gland used: values up to +30 mm

Order code for "Housing", option A "Aluminum, coated"; Zone 1

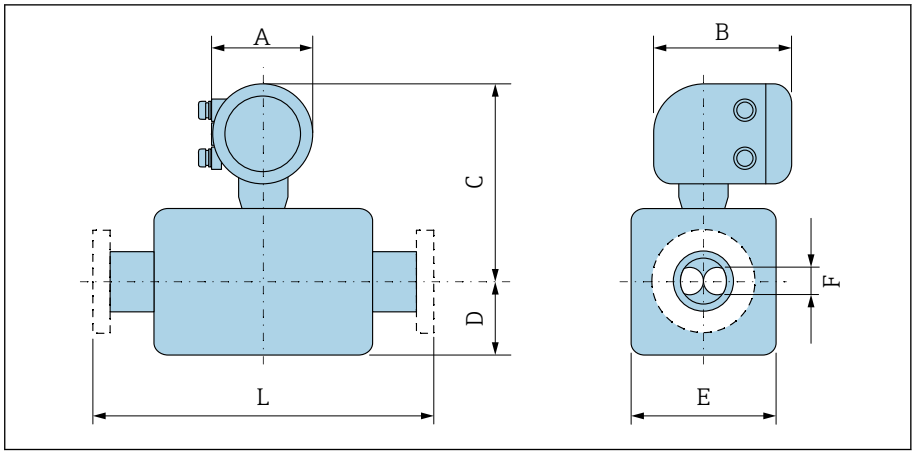

The dimension L depends on the specific process connection:

DN [mm]	A [1] [mm]	B [2] [mm]	C [mm]	D [mm]	E [mm]	F [mm]
8	139	206	246	89	45	5.35
15	139	206	246	100	45	8.30
25	139	206	243	102	51	12.0
40	139	206	249	121	65	17.6
50	139	206	263	175.5	95	26.0
80	139	206	282	205	127	40.5

1) Depending on the cable gland used: values up to +30 mm
2) For Ex de: values +10 mm

Order code for "Housing", option M "Polycarbonate"

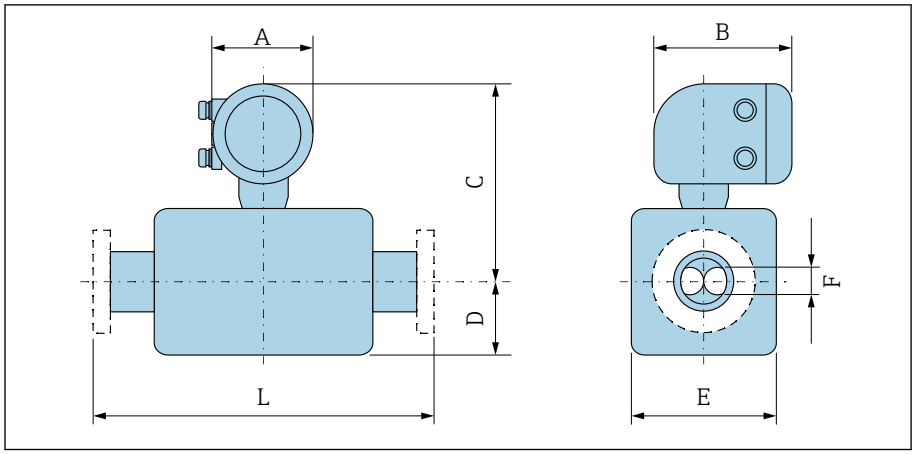

The dimension L depends on the specific process connection:

DN [mm]	A [1] [mm]	B [mm]	C [mm]	D [mm]	E [mm]	F [mm]
8	132	172	251	89	45	5.35
15	132	172	251	100	45	8.30
25	132	172	248	102	51	12.0
40	132	172	254	121	65	17.6
50	132	172	268	175.5	95	26.0
80	132	172	287	205	127	40.5

1) Depending on the cable gland used: values up to +30 mm

Fixed flange

Flange according to EN 1092-1 (DIN 2501): PN 40

Order code for "Process connection", option D2S

1.4404 (F316/F316L)

DN 8 with DN 15 flanges as standard

Surface roughness (flange): EN 1092-1 Form B1 (DIN 2526 Form C), Ra 3.2 to 12.5 µm

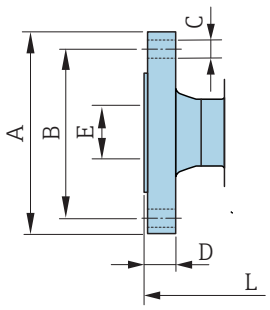

A0042813

DN [mm]	A [mm]	B [mm]	C [mm]	D [mm]	E [mm]	L [mm]
8	95	65	4 × Ø14	16	17.3	232
15	95	65	4 × Ø14	16	17.3	279
25	115	85	4 × Ø14	18	28.5	329
40	150	110	4 × Ø18	18	43.1	445
50	165	125	4 × Ø18	20	54.5	556
80	200	160	8 × Ø18	24	82.5	611

Flange according to ASME B16.5: Class 150

Order code for "Process connection", option AAS

1.4404 (F316/F316L)

DN 8 with DN 15 flanges as standard

Surface roughness (flange): Ra 3.2 to 12.5 µm

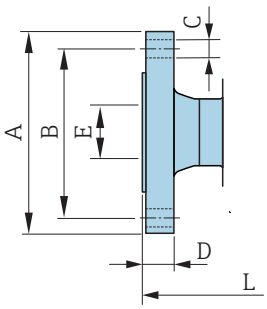

A0042813

DN [mm]	A [mm]	B [mm]	C [mm]	D [mm]	E [mm]	L [mm]
8	90	60.3	4 × Ø15.7	11.2	15.7	232
15	90	60.3	4 × Ø15.7	11.2	15.7	279
25	110	79.4	4 × Ø15.7	14.2	26.7	329
40	125	98.4	4 × Ø15.7	17.5	40.9	445
50	150	120.7	4 × Ø19.1	19.1	52.6	556
80	190	152.4	4 × Ø19.1	23.9	78.0	611

Flange according to ASME B16.5: Class 300

Order code for "Process connection", option ABS

1.4404 (F316/F316L)

DN 8 with DN 15 flanges as standard

Surface roughness (flange): Ra 3.2 to 12.5 µm

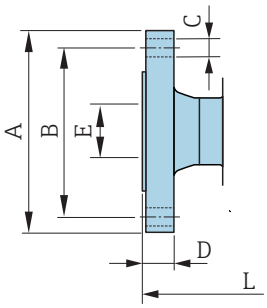

A0042813

DN [mm]	A [mm]	B [mm]	C [mm]	D [mm]	E [mm]	L [mm]
8	95	66.7	4 × Ø15.7	14.2	15.7	232
15	95	66.7	4 × Ø15.7	14.2	15.7	279
25	125	88.9	4 × Ø19.0	17.5	26.7	329
40	155	114.3	4 × Ø22.3	20.6	40.9	445
50	165	127	8 × Ø19.0	22.3	52.6	556
80	210	168.3	8 × Ø22.3	28.4	78.0	611

Flange JIS B2220: 20K

Order code for "Process connection", option NES

1.4404 (F316/F316L)

DN 8 with DN 15 flanges as standard

Surface roughness (flange): Ra 3.2 to 12.5 µm

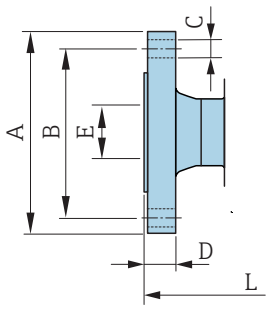

A0042813

DN [mm]	A [mm]	B [mm]	C [mm]	D [mm]	E [mm]	L [mm]
8	95	70	4 × Ø15	14	15	232
15	95	70	4 × Ø15	14	15	279
25	125	90	4 × Ø19	16	25	329
40	140	105	4 × Ø19	18	40	445
50	155	120	8 × Ø19	18	50	556
80	200	160	8 × Ø23	22	80	603

Flange JIS B2220: 40K

Order code for "Process connection", option NGS

1.4404 (F316/F316L)

DN 8 with DN 15 flanges as standard

Surface roughness (flange): Ra 3.2 to 12.5 µm

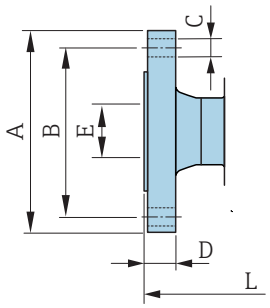

A0042813

DN [mm]	A [mm]	B [mm]	C [mm]	D [mm]	E [mm]	L [mm]
8	115	80	4 × Ø19	20	15	261
15	115	80	4 × Ø19	20	15	300
25	130	95	4 × Ø19	22	25	375
40	160	120	4 × Ø23	24	38	496
50	165	130	8 × Ø19	26	50	601
80	210	170	8 × Ø23	32	75	661

Flange DIN 11864-2 Form A, flange with notch

Order code for "Process connection", option KCS

1.4404 (316/316L)

Suitable for pipe as per DIN11866 series A, flange with notch

3-A version available: order code for "Additional approval", option LP in combination with order code for "Measuring tube mat., wetted surface", option BB (Ra_{max} = 0.76 µm)

Length tolerance for dimension L in mm:
+1.5 / −2.0

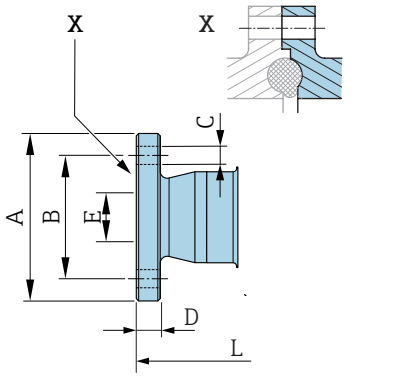

A0042819

DN [mm]	A [mm]	B [mm]	C [mm]	D [mm]	E [mm]	L [mm]
8	54	37	4 × Ø9	10	10	249
15	59	42	4 × Ø9	10	16	293
25	70	53	4 × Ø9	10	26	344
40	82	65	4 × Ø9	10	38	456
50	94	77	4 × Ø9	10	50	562
80	133	112	8 × Ø11	12	81	671

Clamp connections

Tri-Clamp

Order code for "Process connection", option FTS

1.4404 (316/316L)

Suitable for pipe according to DIN 11866 series C

3-A version available: order code for "Additional approval", option LP in combination with order code for "Measuring tube mat., wetted surface", option BB (Ra_{max} = 0.76 µm)

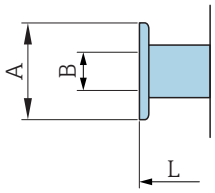

A0043179

DN [mm]	Clamp [mm]	A [mm]	B [mm]	L [mm]
8	1	50.4	22.1	229
15	1	50.4	22.1	273
25	1	50.4	22.1	324
40	1½	50.4	34.8	456
50	2	63.9	47.5	562
80	3	90.9	72.9	671

Couplings

Thread according to DIN 11851

Order code for "Process connection", option FMW

1.4404/316L

Suitable for pipe as per DIN11866 series A

3-A version available: order code for "Additional approval", option LP in combination with order code for "Measuring tube mat., wetted surface", option BB (Ra_{max} = 0.76 µm)

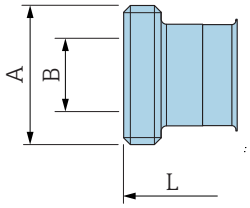

A0043257

DN [mm]	A [mm]	B [mm]	L [mm]
8	Rd 34 × 1/8	16	229
15	Rd 34 × 1/8	16	273
25	Rd 52 × 1/6	26	324
40	Rd 65 × 1/6	38	456
50	Rd 78 × 1/6	50	562
80	Rd 110 × 1/4	81	671

Thread according to DIN 11864-1 Form A

Order code for "Process connection", option FLW

1.4404/316L

Suitable for pipe as per DIN11866 series A

3-A version available: order code for "Additional approval", option LP in combination with order code for "Measuring tube mat., wetted surface", option BB (Ra_{max} = 0.76 µm)

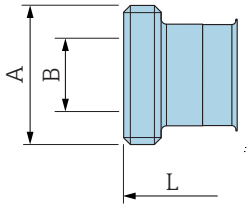

A0043257

DN [mm]	A [mm]	B [mm]	L [mm]
8	Rd 28 × 1/8	10	229
15	Rd 34 × 1/8	16	273
25	Rd 52 × 1/6	26	324
40	Rd 65 × 1/6	38	456
50	Rd 78 × 1/6	50	562
80	Rd 110 × 1/4	81	671

Thread according to SMS 1145

Order code for "Process connection", option SCS

1.4404 (316/316L)

3-A version available: order code for "Additional approval", option LP in combination with order code for "Measuring tube mat., wetted surface", option BB (Ra_{max} = 0.76 µm)

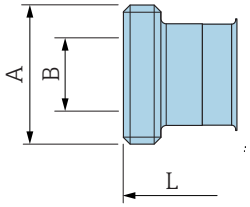

A0043257

DN [mm]	A [mm]	B [mm]	L [mm]
8	Rd 40 × 1/6	22.5	229
15	Rd 40 × 1/6	22.5	273
25	Rd 40 × 1/6	22.5	324
40	Rd 60 × 1/6	35.5	456
50	Rd 70 × 1/6	48.5	562
80	Rd 98 × 1/6	72.9	671

Thread according to ISO 2853

Order code for "Process connection", option JSF

1.4404 (316/316L)

Max. thread diameter A as per ISO 2853 Annex A

3-A version available: order code for "Additional approval", option LP in combination with order code for "Measuring tube mat., wetted surface", option BB (Ra_{max} = 0.76 µm)

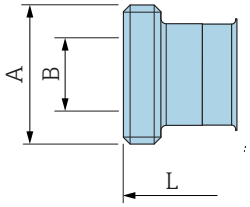

A0043257

DN [mm]	A [mm]	B [mm]	L [mm]
8	37.13	22.6	229
15	37.13	22.6	273
25	37.13	22.6	324
40	50.68	35.6	456
50	64.16	48.6	562
80	91.19	72.9	671

Accessories

Protective cover

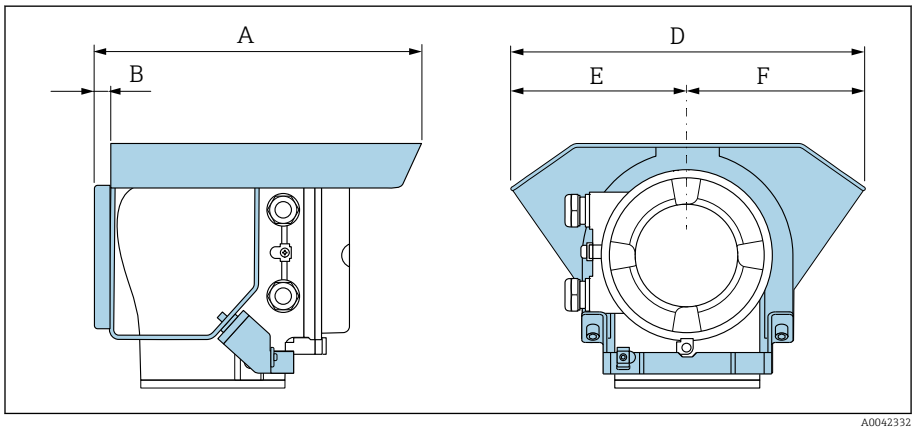

A0042332

A [mm]	B [mm]	D [mm]	E [mm]	F [mm]
257	12	280	140	140

Dimensions in US units

Compact version **70**
Order code for "Housing", option A "Aluminum, coated" 70
Order code for "Housing", option A "Aluminum, coated"; Zone 1 71
Order code for "Housing", option M "Polycarbonate" 72

Fixed flange **73**
Flange according to ASME B16.5: Class 150 73
Flange according to ASME B16.5: Class 300 73

Clamp connections **74**
Tri-Clamp 74

Couplings **74**
Thread according to SMS 1145 74

Accessories **75**
Protective cover 75

Compact version

Order code for "Housing", option A "Aluminum, coated"

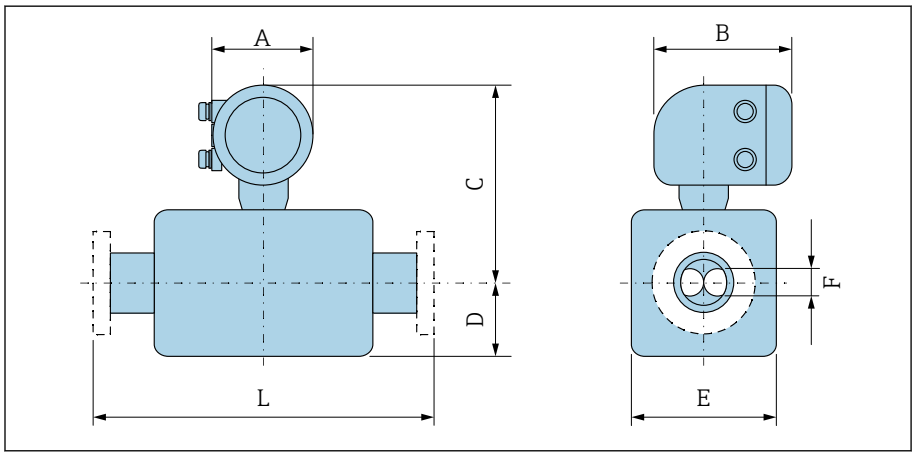

The dimension L depends on the specific process connection:

DN [in]	A [1] [in]	B [in]	C [in]	D [in]	E [in]	F [in]
⅜	5.47	7.01	10	3.5	1.77	0.21
½	5.47	7.01	10	3.94	1.77	0.33
1	5.47	7.01	9.88	4.02	2.01	0.47
1½	5.47	7.01	10.12	4.76	2.56	0.69
2	5.47	7.01	10.67	6.91	3.74	1.02
3	5.47	7.01	11.46	8.07	5	1.59

1) Depending on the cable gland used: values up to 1.18 in

Order code for "Housing", option A "Aluminum, coated"; Zone 1

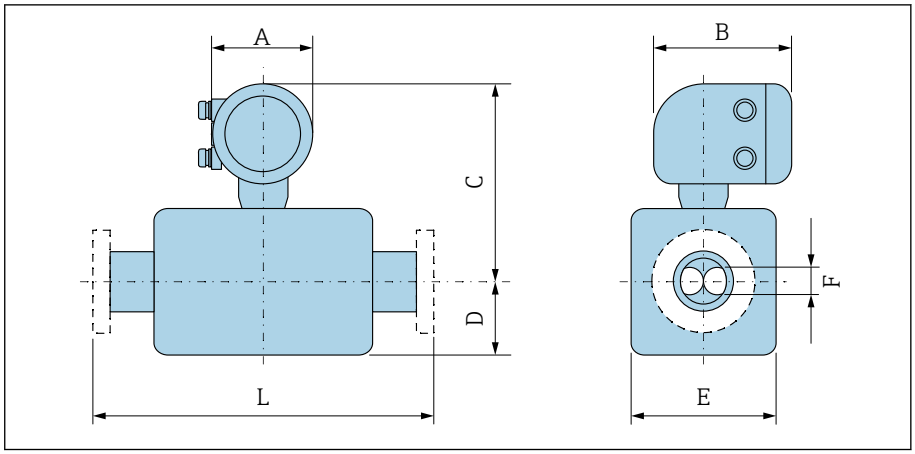

The dimension L depends on the specific process connection:

DN [in]	A [1] [in]	B [2] [in]	C [in]	D [in]	E [in]	F [in]
⅜	5.47	8.11	9.69	3.5	1.77	0.21
½	5.47	8.11	9.69	3.94	1.77	0.33
1	5.47	8.11	9.57	4.02	2.01	0.47
1½	5.47	8.11	9.8	4.76	2.56	0.69
2	5.47	8.11	10.35	6.91	3.74	1.02
3	5.47	8.11	11.1	8.07	5	1.59

1) Depending on the cable gland used: values up to 1.18 in
2) For Ex de: values 0.39 in

Order code for "Housing", option M "Polycarbonate"

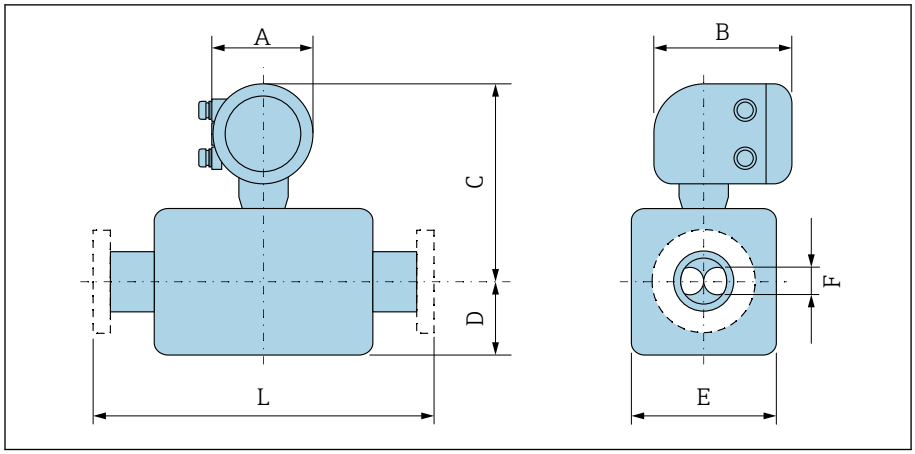

The dimension L depends on the specific process connection:

DN [in]	A [1] [in]	B [in]	C [in]	D [in]	E [in]	F [in]
⅜	5.2	6.77	9.88	3.5	1.77	0.21
½	5.2	6.77	9.88	3.94	1.77	0.33
1	5.2	6.77	9.76	4.02	2.01	0.47
1½	5.2	6.77	10	4.76	2.56	0.69
2	5.2	6.77	10.55	6.91	3.74	1.02
3	5.2	6.77	11.3	8.07	5	1.59

1) Depending on the cable gland used: values up to 1.18 in

Fixed flange

Flange according to ASME B16.5: Class 150

Order code for "Process connection", option AAS

1.4404 (F316/F316L)

DN ⅜" with DN ½" flanges as standard

Surface roughness (flange): Ra 12.5 to 492 µin

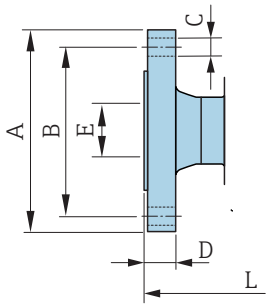

A0042813

DN [in]	A [in]	B [in]	C [in]	D [in]	E [in]	L [in]
⅜	3.54	2.37	4 × Ø0.62	0.44	0.62	9.13
½	3.54	2.37	4 × Ø0.62	0.44	0.62	10.98
1	4.33	3.13	4 × Ø0.62	0.56	1.05	12.95
1½	4.92	3.87	4 × Ø0.62	0.69	1.61	17.52
2	5.91	4.75	4 × Ø0.75	0.75	2.07	21.89
3	7.48	6	4 × Ø0.75	0.94	3.07	24.06

Flange according to ASME B16.5: Class 300

Order code for "Process connection", option ABS

1.4404 (F316/F316L)

DN ⅜" with DN ½" flanges as standard

Surface roughness (flange): Ra 12.5 to 492 µin

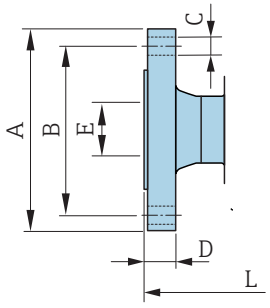

A0042813

DN [in]	A [in]	B [in]	C [in]	D [in]	E [in]	L [in]
⅜	3.74	2.63	4 × Ø0.62	0.56	0.62	9.13
½	3.74	2.63	4 × Ø0.62	0.56	0.62	10.98
1	4.92	3.5	4 × Ø0.75	0.69	1.05	12.95
1½	6.1	4.5	4 × Ø0.88	0.81	1.61	17.52
2	6.5	5	8 × Ø0.75	0.88	2.07	21.89
3	8.27	6.63	8 × Ø0.88	1.12	3.07	24.06

Clamp connections

Tri-Clamp

Order code for "Process connection", option FTS

1.4404 (316/316L)

Suitable for pipe according to DIN 11866 series C

3-A version available: order code for "Additional approval", option LP in combination with order code for "Measuring tube mat., wetted surface", option BB (Ra_{max} = 30 µin)

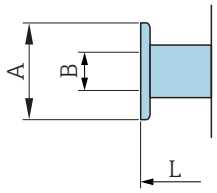

A0043179

DN [in]	Clamp [in]	A [in]	B [in]	L [in]
⅜	1	1.98	0.87	9.02
½	1	1.98	0.87	10.75
1	1	1.98	0.87	12.76
1½	1½	1.98	1.37	17.95
2	2	2.52	1.87	22.13
3	3	3.58	2.87	26.42

Couplings

Thread according to SMS 1145

Order code for "Process connection", option SCS

1.4404 (316/316L)

3-A version available: order code for "Additional approval", option LP in combination with order code for "Measuring tube mat., wetted surface", option BB (Ra_{max} = 30 µin)

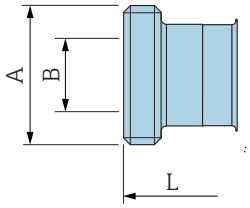

A0043257

DN [in]	A [in]	B [in]	L [in]
⅜	Rd 40 × ⅙	0.89	9.02
½	Rd 40 × ⅙	0.89	10.75
1	Rd 40 × ⅙	0.89	12.76
1½	Rd 60 × ⅙	1.4	17.95
2	Rd 70 × ⅙	1.91	22.13
3	Rd 98 × ⅙	2.87	26.42

Accessories

Protective cover

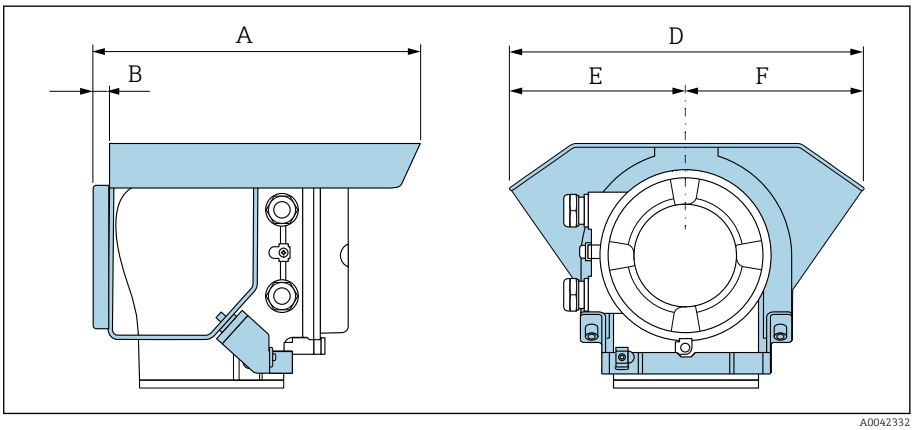

A0042332

A [in]	B [in]	D [in]	E [in]	F [in]
10.12	0.47	11.02	5.51	5.51

Local display

Operating concept 78
Operating options 78
Operating tools 79

Operating concept

Operation method	▪ Operation via local display with touch screen. ▪ Operation via SmartBlue App.
Menu structure	Operator-oriented menu structure for user-specific tasks: ▪ Diagnostics ▪ Application ▪ System ▪ Guidance ▪ Language
Commissioning	▪ Commissioning via a guided menu (**Commissioning** wizard). ▪ Menu guidance with interactive help function for individual parameters.
Reliable operation	▪ Operation in local language. ▪ Uniform operating philosophy in device and in the SmartBlue App. ▪ Write protection ▪ When electronics modules are replaced: configurations are transferred using the T-DAT Backup device memory. The device memory contains process data, device data and the event logbook. No reconfiguration is necessary.
Diagnostic behavior	Efficient diagnostic behavior increases measurement availability: ▪ Open troubleshooting measures via local display and SmartBlue App. ▪ Diverse simulation options. ▪ Logbook of events that have occurred.

Operating options

Local display	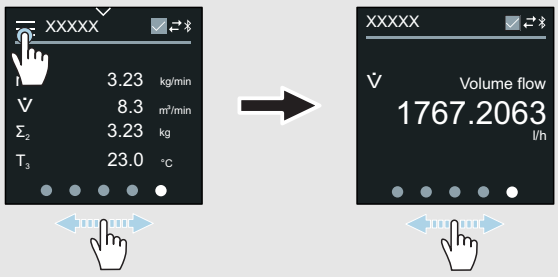 A0042957 Display elements: ▪ LCD touch screen ▪ Depends on the orientation, automatic alignment of local display. ▪ Configuration of display format for measured variables and status variables. Operating elements: ▪ Touch screen ▪ Local display can also be accessed in the hazardous area.
SmartBlue App	▪ The SmartBlue App allows the user to put devices into operation and operate them. ▪ Based on Bluetooth. ▪ No separate driver required. ▪ Available for mobile handheld terminals, tablets and smartphones. ▪ Suitable for convenient and secure access to devices in hard-to-reach locations or in hazardous areas. ▪ Can be used within a 20 m (65.6 ft) radius of the device. ▪ Encrypted and secure data transmission. ▪ No data loss during commissioning and maintenance. ▪ Diagnostic information and process information in real time.

Operating tools

Operating tools	Operating unit	Interface	Additional information
DeviceCare SFE100	▪ Notebook ▪ PC ▪ Tablet with Microsoft Windows system	▪ CDI service interface ▪ Fieldbus protocol	Innovation brochure IN01047S
FieldCare SFE500	▪ Notebook ▪ PC ▪ Tablet with Microsoft Windows system	▪ CDI service interface ▪ Fieldbus protocol	Operating Instructions BA00027S and BA00059S
SmartBlue App	▪ Devices with iOS: iOS9.0 or higher ▪ Devices with Android: Android 4.4 KitKat or higher	Bluetooth	Endress+HauserSmartBlue App: ▪ Google Playstore (Android) ▪ iTunes Apple Shop (iOS devices)
Device Xpert	Field Xpert SFX 100/350/370	HART fieldbus protocol	Operating Instructions BA01202S

Certificates and approvals

Ex approval 82
Non-Ex approval 82
Pressure Equipment Directive 82
Sanitary compatibility 82
Pharmaceutical compatibility 82
HART certification 83
Radio approval 83
Other standards and guidelines 83

Ex approval

- ATEX
- IECEx
- cCSAus
- EAC
- NEPSI
- INMETRO
- JPN

Non-Ex approval

- cCSAus
- EAC
- UK
- KC

Pressure Equipment Directive

- CRN
- PED Cat. II/III

Sanitary compatibility

- 3-A approval
  - Only measuring devices with the order code for "Additional approval", option LP "3A" have 3-A approval.
  - The 3-A approval refers to the measuring device.
  - When installing the measuring device, ensure that no liquid can accumulate on the outside of the measuring device. Remote transmitters must be installed in accordance with the 3-A Standard.
  - Accessories (e.g. heating jacket, weather protection cover) must be installed in accordance with the 3-A Standard. Each accessory can be cleaned. Disassembly may be necessary under certain circumstances.
- Food Contact Materials Regulation (EC) 1935/2004
  A declaration for a specific serial number that confirms compliance with the requirements of (EC) 1935/2004 is only generated for measuring devices with the order code for "Test, Certificate", option J1 "EU Food Contact Materials (EC) 1935/2004.
- FDA
  A declaration for a specific serial number that confirms compliance with FDA requirements is only generated for measuring devices with the order code for "Test, Certificate", option J2 "US Food Contact Materials FDA CFR 21".
- Food Contact Materials Regulation GB 4806
  A declaration for a specific serial number that confirms compliance with the requirements of GB 4806 is only generated for measuring devices with the order code for "Test, Certificate", option J3 "CN Food Contact Materials GB 4806.

Pharmaceutical compatibility

- FDA
- USP Class VI
- TSE/BSE Certificate of Suitability
- cGMP
  Devices with the order code for "Test, Certificate", option JG "Conformity with cGMP-derived requirements, declaration" comply with the requirements of cGMP with regard to the surfaces of parts in contact with the medium, design, FDA 21 CFR material conformity, USP Class VI tests and TSE/BSE conformity.
  A serial number-specific declaration is generated.

HART certification

The device is certified and registered by the FieldComm Group. The measuring system meets all the requirements of the following specifications:
- Certified according to HART 7
- The device can also be operated with certified devices of other manufacturers (interoperability).

Radio approval

The device has radio approvals.

Other standards and guidelines

- IEC/EN 60529
  Degrees of protection provided by enclosures (IP code)
- IEC/EN 60068-2-6
  Environmental influences: Test procedure - Test Fc: vibrate (sinusoidal)
- IEC/EN 60068-2-31
  Environmental influences: Test procedure - Test Ec: shocks due to rough handling, primarily for devices.
- IEC/EN 61010-1
  Safety requirements for electrical equipment for measurement, control and laboratory use - general requirements.
- IEC/EN 61326
  Emission in accordance with Class A requirements. Electromagnetic compatibility (EMC requirements)
- NAMUR NE 21
  Electromagnetic compatibility (EMC) of industrial process and laboratory control equipment.
- NAMUR NE 32
  Data retention in the event of a power failure in field and control instruments with microprocessors.
- NAMUR NE 43
  Standardization of the signal level for the breakdown information of digital transmitters with analog output signal.
- NAMUR NE 53
  Software of field devices and signal-processing devices with digital electronics.
- NAMUR NE 80
  The application of the pressure equipment directive to process control devices.
- NAMUR NE 105
  Specifications for integrating fieldbus devices in engineering tools for field devices.
- NAMUR NE 107
  Self-monitoring and diagnosis of field devices.
- NAMUR NE 131
  Requirements for field devices for standard applications.
- NAMUR NE 132
  Coriolis mass meter
- ETSI EN 300 328
  Guidelines for 2.4 GHz radio components
- EN 301489
  Electromagnetic compatibility and radio spectrum matters (ERM).

Application packages

Use 86
Heartbeat Verification + Monitoring 86
Density output 86

Use

Many different application packages are available to enhance the functionality of the device. Such packages might be needed to address safety aspects or specific application requirements.

The application packages can be ordered with the device or subsequently from Endress+Hauser. Detailed information on the relevant order code is available from your local Endress+Hauser sales organization or on the product page of the Endress+Hauser website: www.endress.com.

Heartbeat Verification + Monitoring

Heartbeat Verification

Availability depends on the product structure.

Meets the requirement for traceable verification to DIN ISO 9001:2008 Chapter 7.6 a) "Control of monitoring and measuring equipment":
- Functional testing in the installed state without interrupting the process.
- Traceable verification results on request, including a report.
- Simple testing process with local operation or other operating interfaces.
- Clear measuring point assessment (pass/fail) with high test coverage within the framework of manufacturer specifications.
- Extension of calibration intervals according to operator's risk assessment.

Heartbeat Monitoring

Availability depends on the product structure.

Heartbeat Monitoring continuously supplies data, which are characteristic of the measuring principle, to an external condition monitoring system for the purpose of preventive maintenance or process analysis. These data enable the operator to:
- Draw conclusions - using these data and other information - about the impact the process influences, e.g. corrosion, abrasion, formation of buildup, have on the measuring performance over time.
- Schedule servicing in time.
- Monitor the process quality or product quality, e.g. gas pockets.

Density output

Many applications use density as a key measured value for monitoring quality or controlling processes. The device measures the density of the medium and makes this value available to the control system.

With this application package, the density can be assigned as a process variable and displayed.

Accessories

Device-specific accessories 88
Communication-specific accessories 89
Service-specific accessory 89
System components 90

Device-specific accessories

Transmitter

Accessories	Description	Order number
Proline 10 transmitter	Installation Instructions EA01350D	8XBBXX-*...*
Weather protection cover	Protects the device from weather exposure: Installation Instructions EA01351D	71502730

Sensor

Accessories	Description

Heating jacket	The heating jacket is used to stabilize the temperature of the media in the sensor. Water, water vapor and other non-corrosive liquids are permitted for use as the medium.
	If using oil as a heating medium, please consult with an Endress+Hauser service organization.
	Heating jackets cannot be used with sensors fitted with a rupture disk.
	▪ If ordering with the device: order code for "Accessory enclosed"
	  ▪ Option RB "Heating jacket, G 1/2" female thread"
	  ▪ Option RC "Heating jacket, G 3/4" female thread"
	  ▪ Option RD "Heating jacket, NPT 1/2" female thread"
	  ▪ Option RE "Heating jacket, NPT 3/4" female thread"
	▪ If ordering subsequently: use the order code with the product root DK8003.
	Special Documentation SD02695D

Communication-specific accessories

Accessories	Description
Commubox FXA195 USB/HART modem	Intrinsically safe HART communication with FieldCare and FieldXpert Technical Information TI00404F
Commubox FXA291	Connects the Endress+Hauser devices with the CDI interface (= Endress+Hauser Common Data Interface) to the USB interface of a personal computer or laptop. Technical Information TI405C/07
HART Loop Converter HMX50	Is used to evaluate and convert dynamic HART process variables to analog current signals or limit values. ▪ Technical Information TI00429F ▪ Operating Instructions BA00371F
Fieldgate FXA42	Transmission of measured values from connected 4 to 20 mA analog and digital devices. ▪ Technical Information TI01297S ▪ Operating Instructions BA01778S ▪ Product page: www.endress.com/fxa42
Field Xpert SMT70	Tablet PC for the configuration of the device. Enables mobile Plant Asset Management to manage the devices with a digital communication interface. Suitable for Zone 2. ▪ Technical Information TI01342S ▪ Operating Instructions BA01709S ▪ Product page: www.endress.com/smt70
Field Xpert SMT77	Tablet PC for the configuration of the device. Enables mobile Plant Asset Management to manage the devices with a digital communication interface. Suitable for Zone 1. ▪ Technical Information TI01418S ▪ Operating Instructions BA01923S ▪ Product page: www.endress.com/smt77

Service-specific accessory

Accessories	Description	Order number
Applicator	Software for selecting and sizing Endress+Hauser devices.	https://portal.endress.com/webapp/applicator
W@M Life Cycle Management	▪ Information platform with software applications and services ▪ Supports the entire life cycle of the facility.	www.endress.com/lifecyclemanagement
FieldCare	FDT-based plant asset management software from Endress+Hauser. Management and configuration of Endress+Hauser devices. Operating Instructions BA00027S and BA00059S	▪ Device driver: www.endress.com → Download Area ▪ CD-ROM (contact Endress+Hauser) ▪ DVD (contact Endress+Hauser)
DeviceCare	Software for connecting and configuring Endress+Hauser devices. Innovation brochure IN01047S	▪ Device driver: www.endress.com → Download Area ▪ CD-ROM (contact Endress+Hauser) ▪ DVD (contact Endress+Hauser)

System components

Accessories	Description
Memograph M	Graphic data manager: ▪ Record measured values ▪ Monitor limit values ▪ Analyze measuring points ▪ Technical Information TI00133R ▪ Operating Instructions BA00247R
iTEMP	Temperature transmitter: ▪ Measure the absolute pressure and gauge pressure of gases, vapors and liquids ▪ Read the medium temperature "Fields of Activity" document FA00006T
Cerabar M	Pressure device: ▪ Measure the absolute pressure and gauge pressure of gases, vapors and liquids ▪ Read the operating pressure value ▪ Technical Information TI00426P and TI00436P ▪ Operating Instructions BA00200P and BA00382P
Cerabar S	Pressure device: ▪ Measure the absolute pressure and gauge pressure of gases, vapors and liquids ▪ Read the operating pressure value ▪ Technical Information TI00383P ▪ Operating Instructions BA00271P



www.addresses.endress.com

Endress+Hauser

People for Process Automation