Inductive Sensors

BES M18MI-NSC50B-BV03
Order Code: BES007C

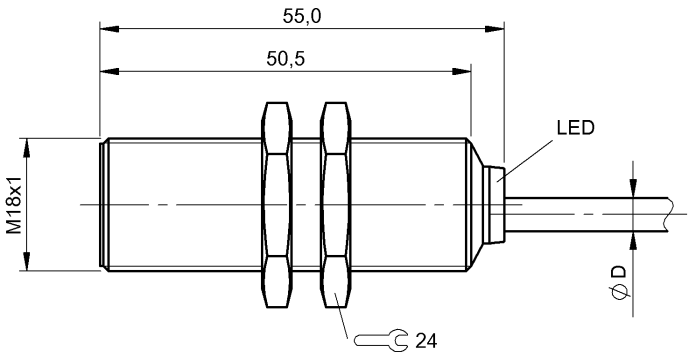

Basic features

Approval/Conformity	CE cULus EAC WEEE
Basic standard	IEC 60947-5-2
Trademark	Global

Display/Operation

Function indicator	yes
Power indicator	no

Electrical connection

Cable diameter D	4.50 mm
Cable length L	3 m
Conductor cross-section	0.34 mm²
Connection type	Cable, 3.00 m, PVC
Number of conductors	3
Polarity reversal protected	yes
Protection against device mix-ups	yes
Short-circuit protection	yes

Electrical data

Load capacitance max. at Ue	0.5 µF
Min. operating current Im	0 mA
No-load current Io max., damped	8 mA
No-load current Io max., undamped	2 mA
Operating voltage Ub	10...30 VDC
Output resistance Ra	33.0 kOhm + D
Protection class	II
Rated insulation voltage Ui	250 V AC
Rated operating current Ie	200 mA
Rated operating voltage Ue DC	24 V
Rated short circuit current	100 A
Ready delay tv max.	30 ms
Residual current Ir max.	10 µA
Ripple max. (% of Ue)	15 %
Switching frequency	2000 Hz
Utilization category	DC -13
Voltage drop static max.	2.5 V

Environmental conditions

Ambient temperature	-40...85 °C
Contamination scale	3
EN 60068-2-27, Shock	Half-sinus, 30 g_n, 11 ms
EN 60068-2-6, Vibration	55 Hz, amplitude 1 mm, 3x30 min
IP rating	IP68

Functional safety

MTTF (40 °C)	411 a

Interface

Switching output	NPN normally open (NO)

Inductive Sensors

BES M18MI-NSC50B-BV03
Order Code: BES007C

Material

Housing material	Brass, Nickel-free coated
Material jacket	PVC
Material sensing surface	PBT

Mechanical data

Dimension	Ø 18 x 55 mm
Installation	for flush mounting
Size	M18x1
Tightening torque	25 Nm

Range/Distance

Assured operating distance Sa	4.0 mm
Hysteresis H max. (% of Sr)	15.0 %
Rated operating distance Sn	5.0 mm
Real switching distance sr	5 mm
Repeat accuracy max. (% of Sr)	5.0 %
Temperature drift max. (% of Sr)	15 %
Tolerance Sr	±10 %

Remarks

The sensor is functional again after the overload has been eliminated.

For more information about MTTF and B10d see MTTF / B10d Certificate

Indication of the MTTF- / B10d value does not represent a binding composition and/or life expectancy assurance; these are simply experiential values with no warranty implications. These declared values also do not extend the expiration period for defect claims or affect it in any way.

Wiring Diagrams

