1SL0263A00, 1SL0264A00, 1SL0279A00, 1SL0280A00

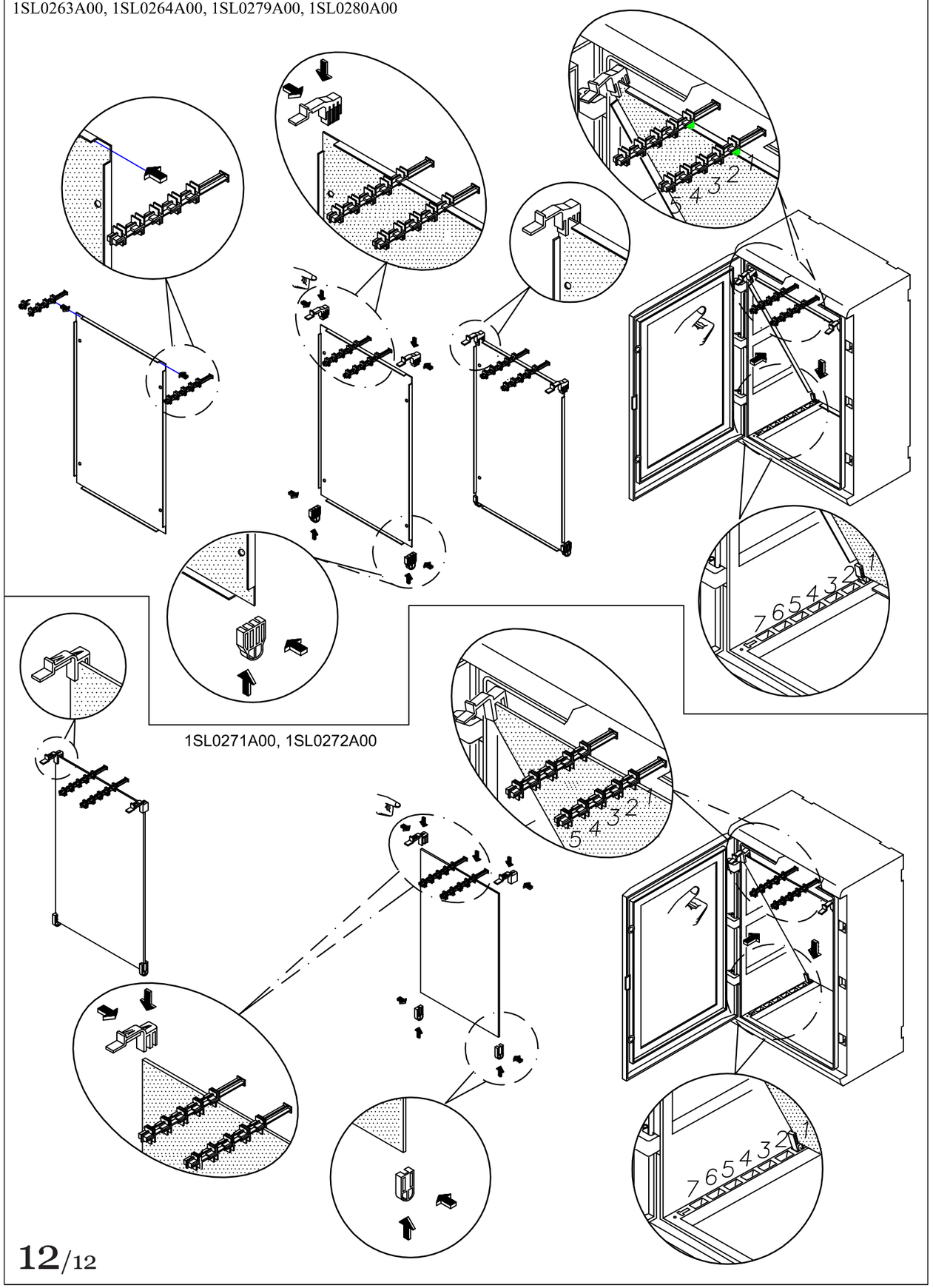

1SL0271A00, 1SL0272A00

ABB Gemini

			3/12	9/12	10/12 - 11/12 12/12	6/12- 7/12 8/12	7/12	8/12
	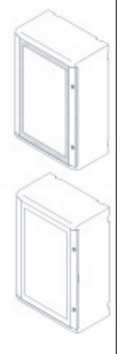						 H150 mm  H300 mm	 H150 mm 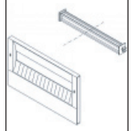 H225 mm
1 400x335x210 *24 mod (12x2)*	1SL0211A00 1SL0201A00	1SL0221A00	1SL0241A00 1SL0231A00	1SL0251A00	1SL0259A00 1SL0275A00 1SL0267A00	1SL0283A00	1SL0296A00 -	1SL0307A00 -
2 550x460x260 *54 mod (18x3)*	1SL0212A00 1SL0202A00	1SL0222A00	1SL0242A00 1SL0232A00	1SL0252A00	1SL0260A00 1SL0276A00 1SL0268A00	1SL0284A00	1SL0297A00 1SL0302A00	1SL0308A00 1SL0313A00
3 700x460x260 *72 mod (18x4)*	1SL0213A00 1SL0203A00	1SL0223A00	1SL0243A00 1SL0233A00	1SL0253A00	1SL0261A00 1SL0277A00 1SL0269A00	1SL0285A00	1SL0297A00 1SL0302A00	1SL0308A00 1SL0313A00
4 700x590x260 *96 mod (24x4)*	1SL0214A00 1SL0204A00	1SL0224A00	1SL0244A00 1SL0234A00	1SL0254A00	1SL0262A00 1SL0278A00 1SL0270A00	1SL0285A00	1SL0298A00 1SL0303A00	1SL0309A00 1SL0314A00
5 855x590x360 *120 mod (24x5)*	1SL0215A00 1SL0205A00	1SL0225A00	1SL0245A00 1SL0235A00	1SL0255A00	1SL0263A00 1SL0279A00 1SL0271A00	1SL0286A00	1SL0298A00 1SL0303A00	1SL0309A00 1SL0314A00
6 1005x840x360 *216 mod (36x6)*	1SL0216A00 1SL0206A00	1SL0226A00	1SL0246A00 1SL0236A00	1SL0256A00	1SL0264A00 1SL0280A00 1SL0272A00	1SL0287A00	1SL0299A00 1SL0304A00	1SL0310A00 1SL0315A00
	 1SL0352A00	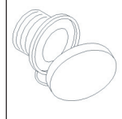 1SL0351A00	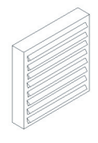 1SL0350A00	 1SL0339A00	 1SL0341A00	 1SL0340A00	 1SL0342A00	 12894

	7/12- 8/12	7/12	7/12	8/12	4/12	6/12	6/12	6/12	4/12
							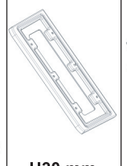	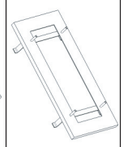	
1 400x335x210 *24 mod (12x2)*	1SL0290A00	1SL0318A00 1SL0324A00 1SL0330A00	- -	1SL0353A00 1SL0360A00	1SL0343A00	-	-	-	1SL0385A00
2 550x460x260 *54 mod (18x3)*	1SL0291A00	1SL0319A00 1SL0325A00 1SL0331A00	1SL0336A00 1SL0370A00	1SL0354A00 1SL0361A00	1SL0344A00	1SL0413A00	1SL0423A00	1SL0433A00	1SL03863A00
3 700x460x260 *72 mod (18x4)*	1SL0291A00	1SL0319A00 1SL0325A00 1SL0331A00	1SL0336A00 1SL0370A00	1SL0354A00 1SL0361A00	1SL0344A00	1SL0413A00	1SL0423A00	1SL0433A00	1SL0387A00
4 700x590x260 *96 mod (24x4)*	1SL0292A00	1SL0320A00 1SL0326A00 1SL0332A00	1SL0337A00 1SL0371A00	1SL0355A00 1SL0362A00	1SL0345A00	1SL0414A00	1SL0424A00	1SL0434A00	1SL0388A00
5 855x590x360 *120 mod (24x5)*	1SL0292A00	1SL0320A00 1SL0326A00 1SL0332A00	1SL0337A00 1SL0371A00	1SL0355A00 1SL0362A00	1SL0345A00	1SL0415A00	1SL0425A00	1SL0435A00	1SL0389A00
6 1005x840x360 *216 mod (36x6)*	1SL0293A00	1SL0321A00 1SL0327A00 1SL0333A00	1SL0338A00 1SL0372A00	1SL0356A00 1SL0363A00	1SL0346A00	1SL0416A00	1SL0426A00	1SL0436A00	1SL0390A00
	 12851	 12863	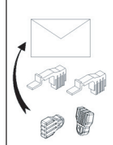 1SL0380A00	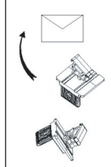 1SL0381A00	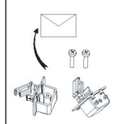 1SL0382A00	 1SL0383A00	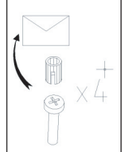 1SL0397A00	 1SL0400A00

1SL0259A00, 1SL0260A00, 1SL0261A00, 1SL0262A00, 1SL0275A00, 1SL0276A00, 1SL0277A00, 1SL0278A00

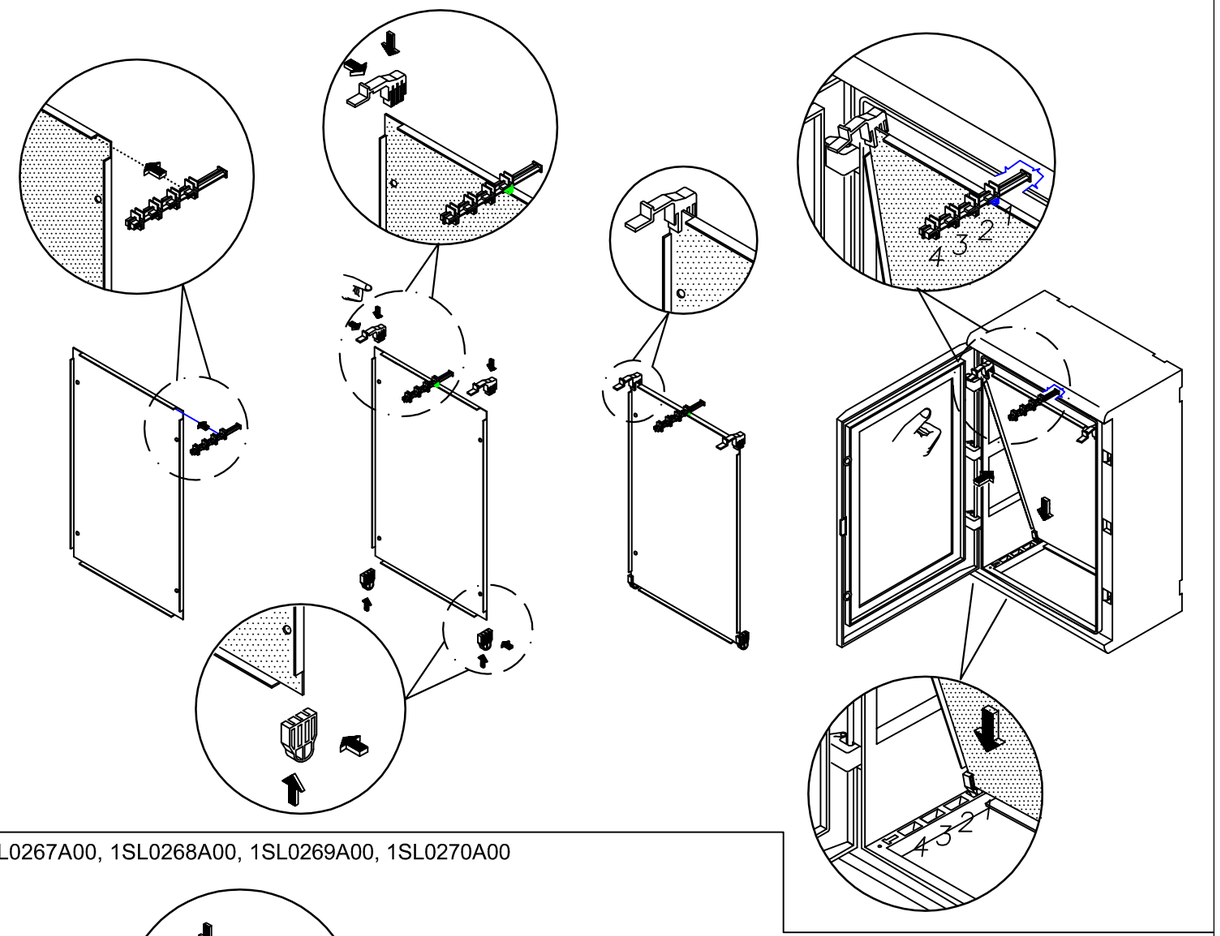

1SL0267A00, 1SL0268A00, 1SL0269A00, 1SL0270A00

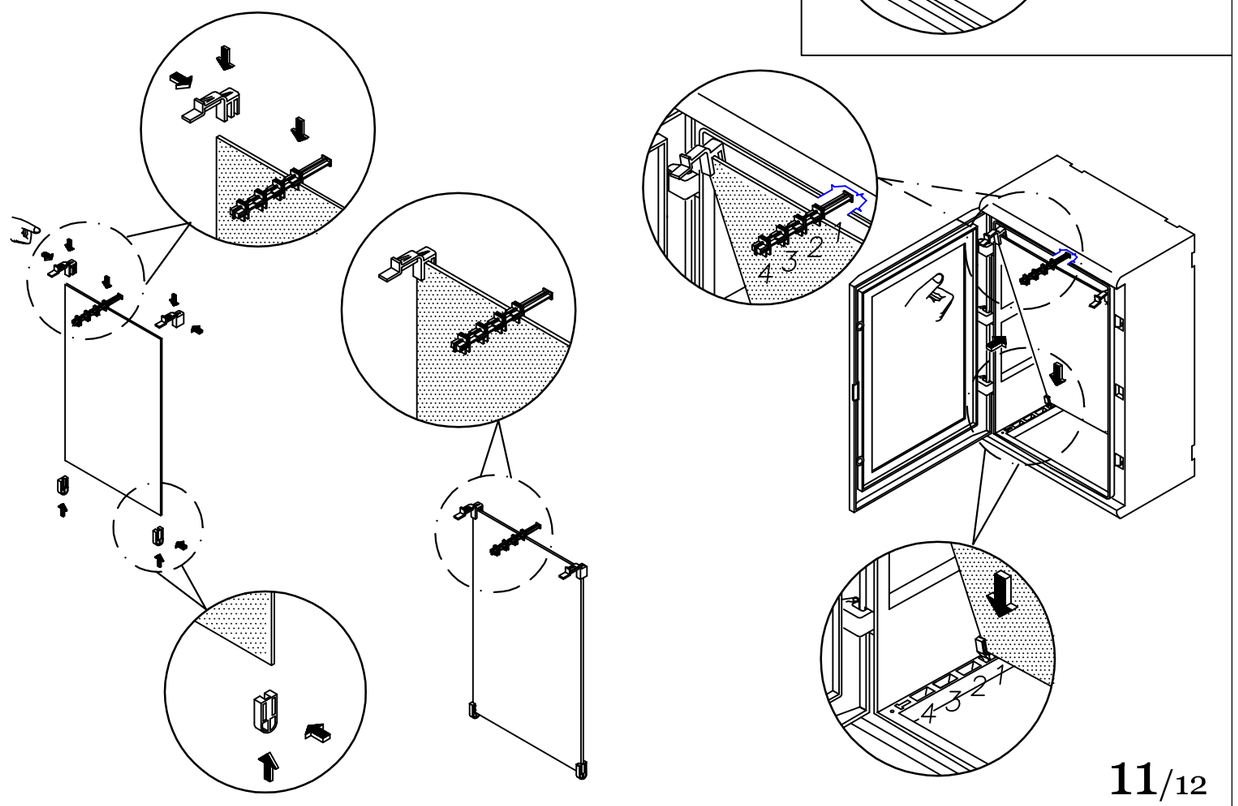

1SL0383A00

X4

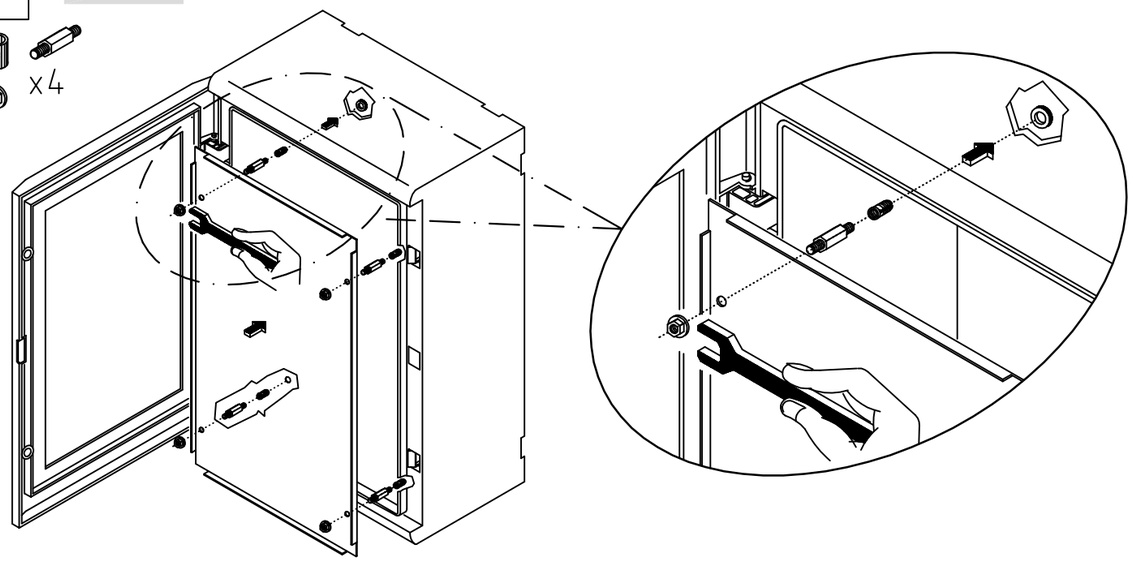

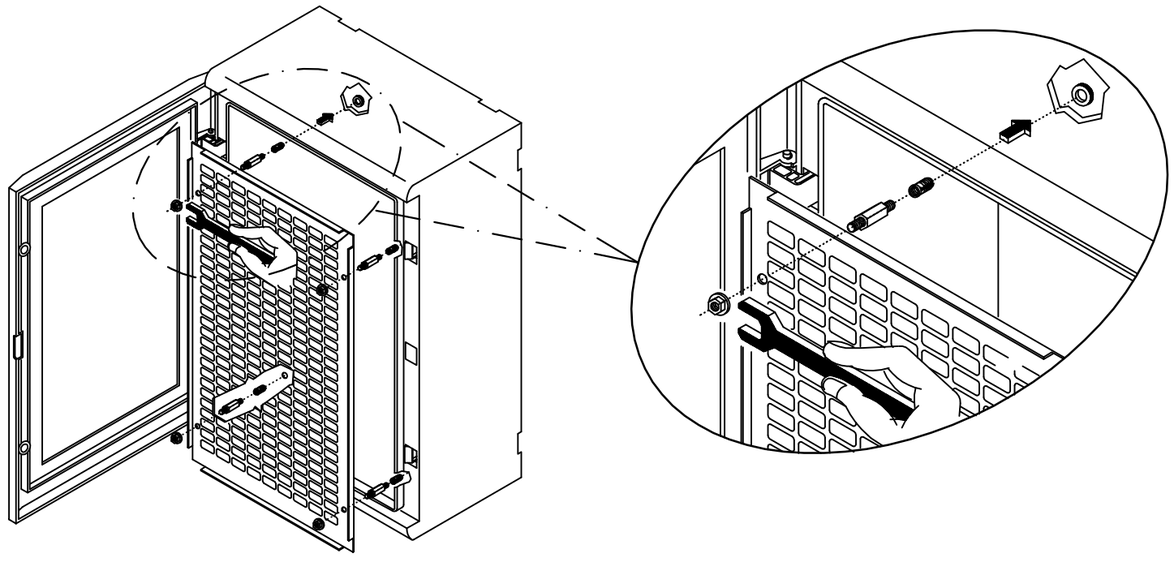

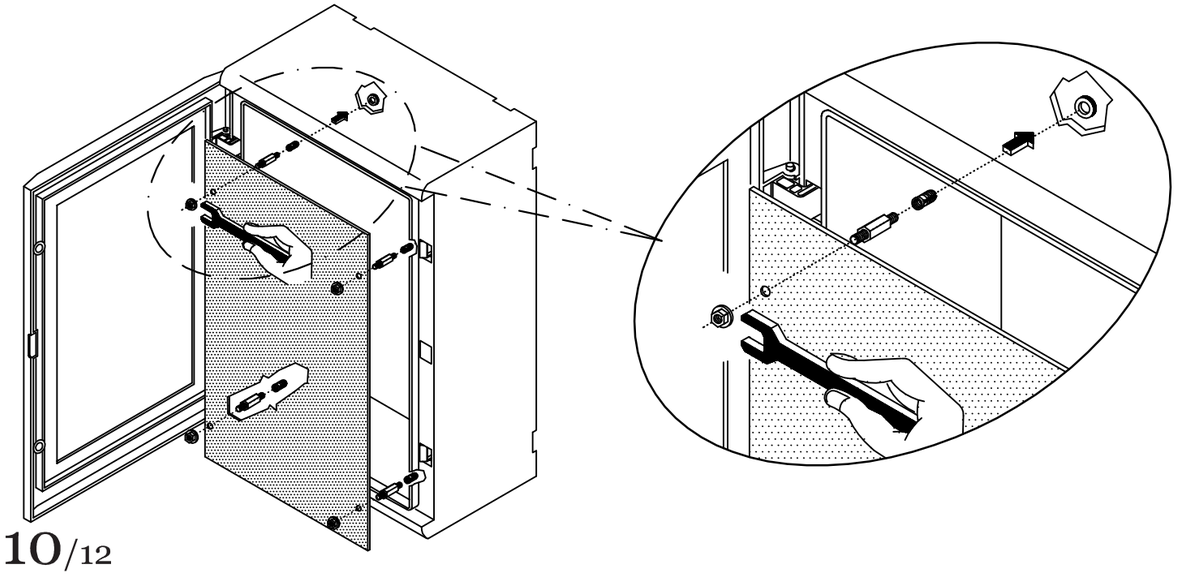

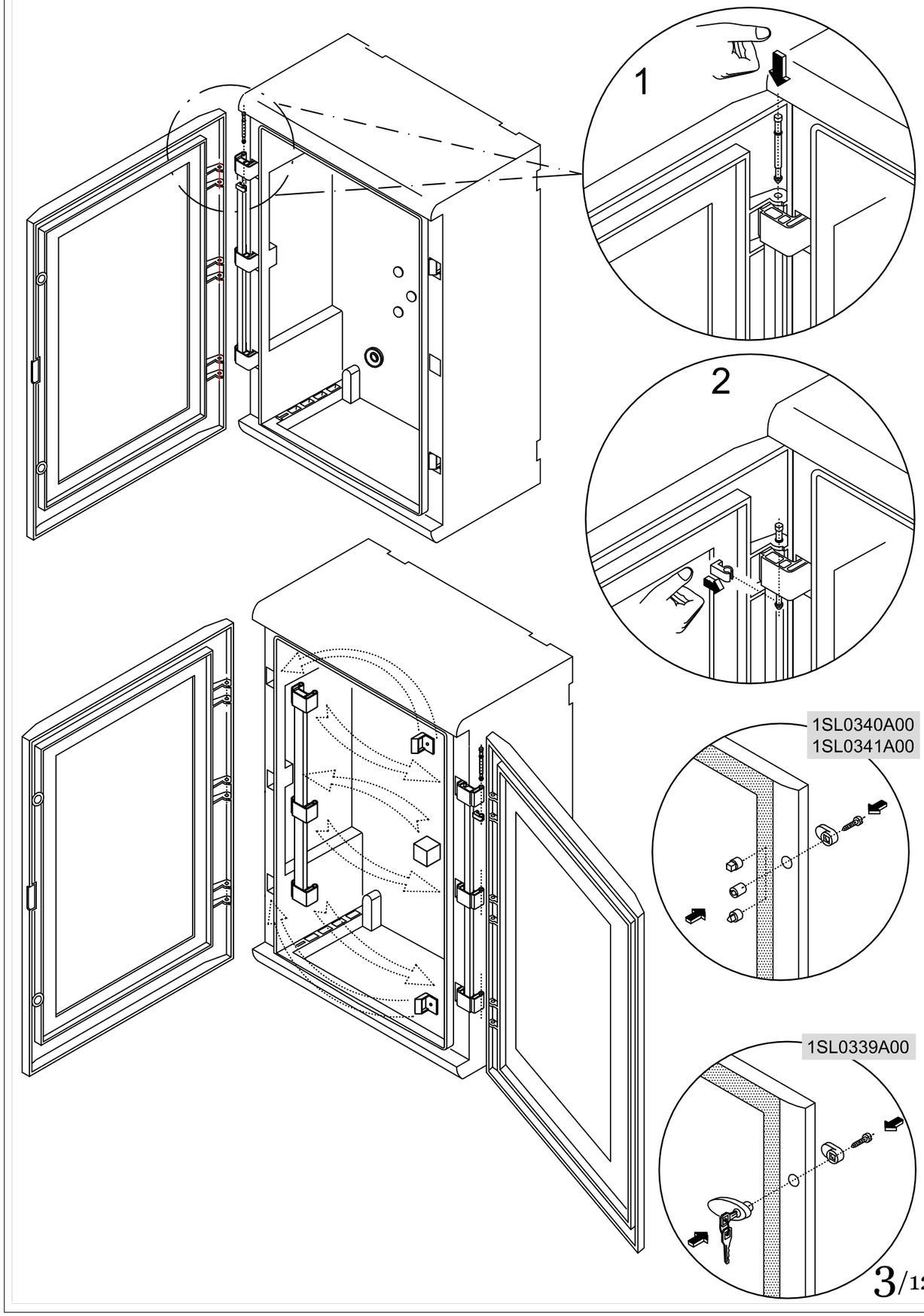

1SL0343A00
1SL0344A00
1SL0345A00
1SL0346A00

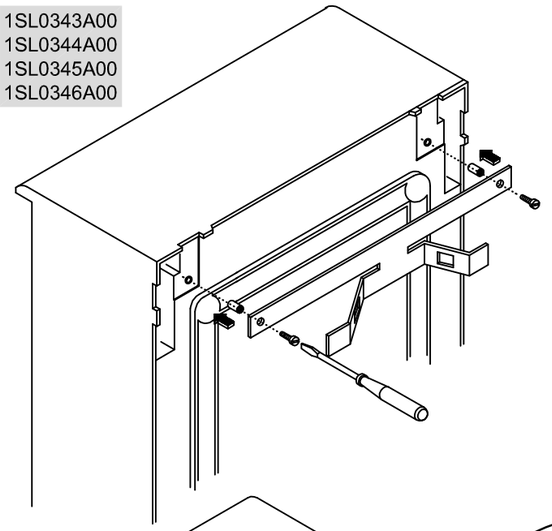

A=B=104.5mm
D=115mm
d=25mm

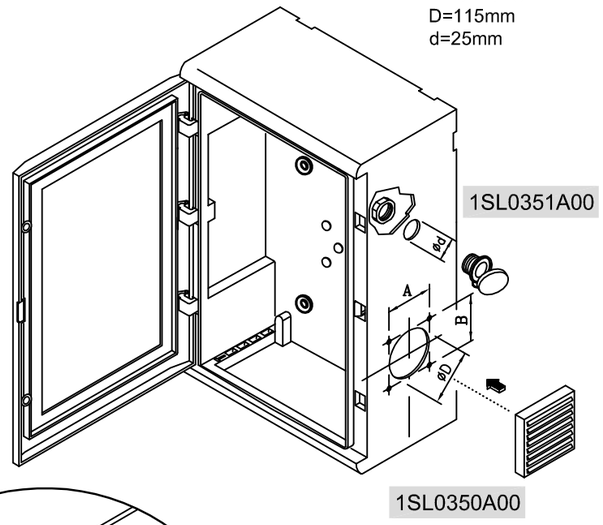

1SL0351A00

1SL0350A00

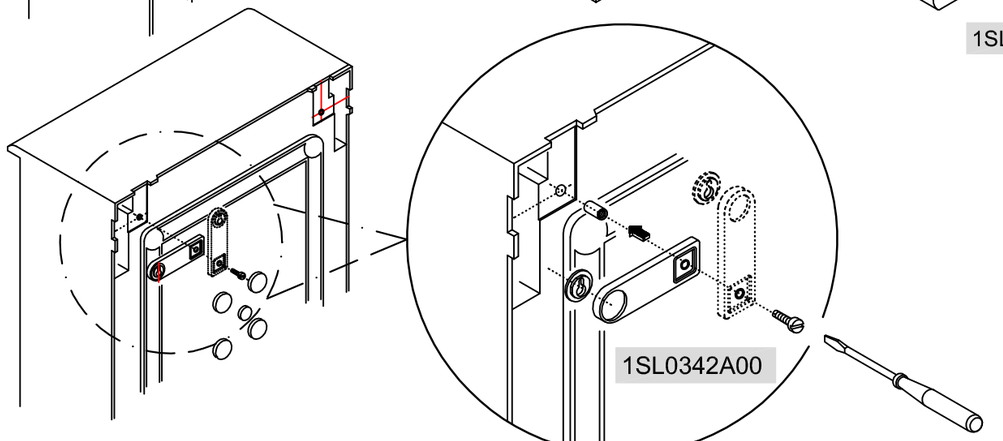

1SL0342A00

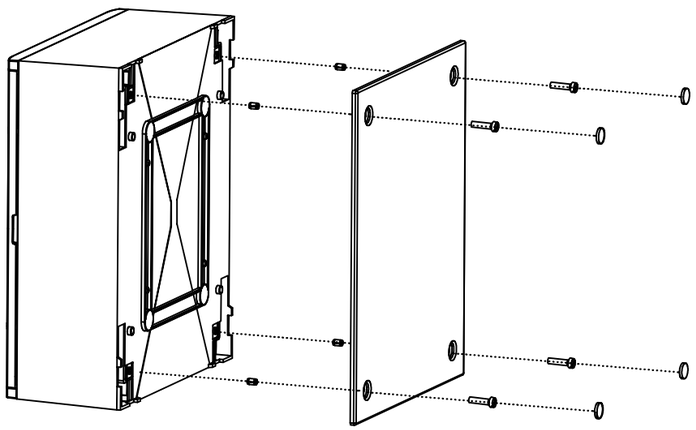

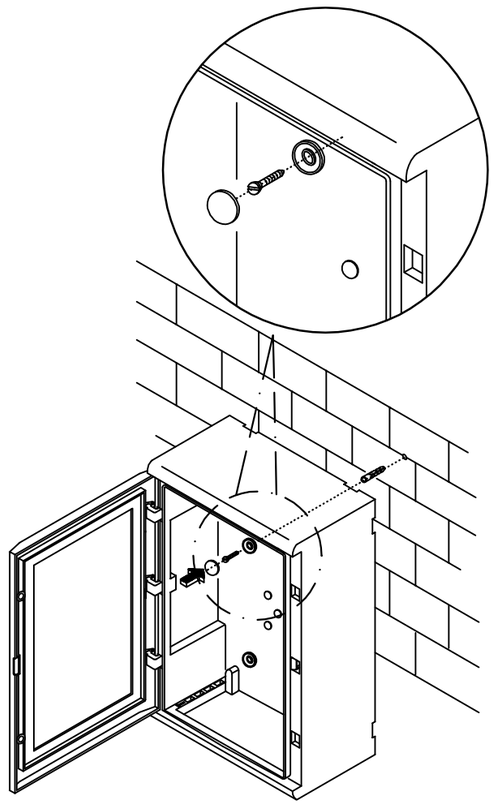

4/12

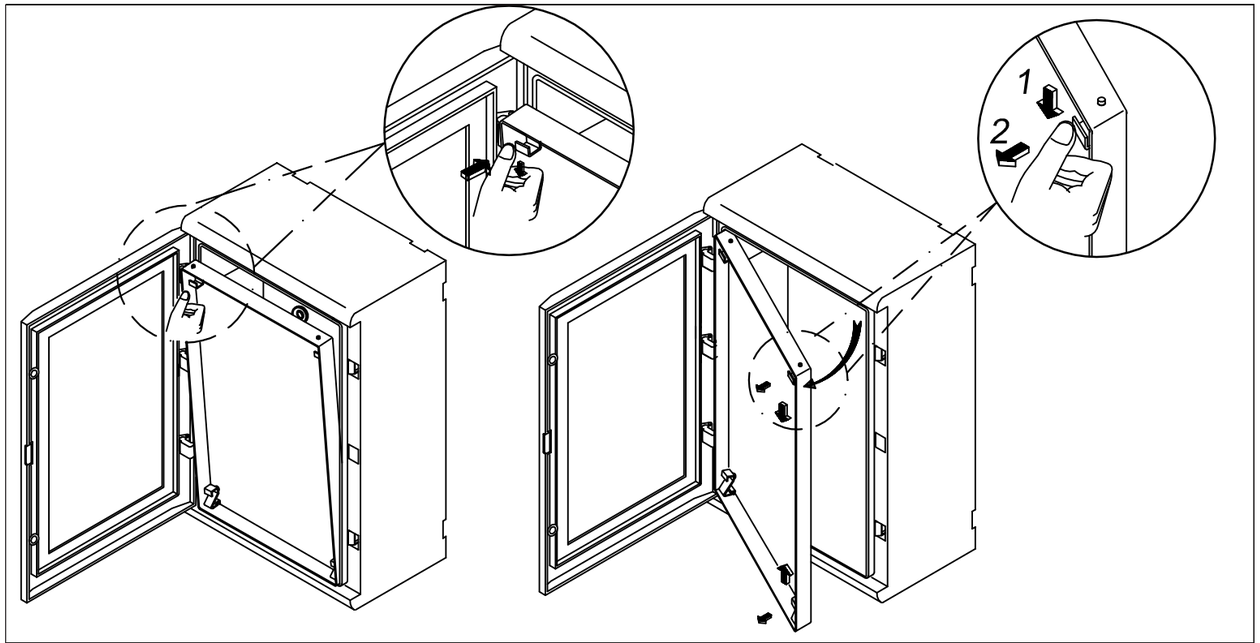

1SL0400A00

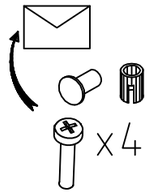

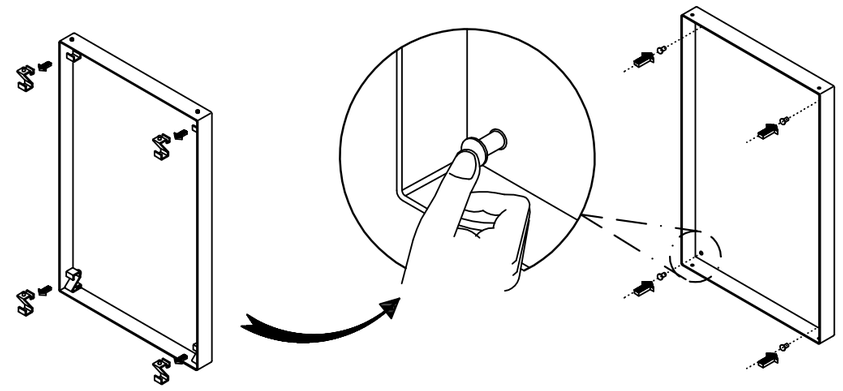

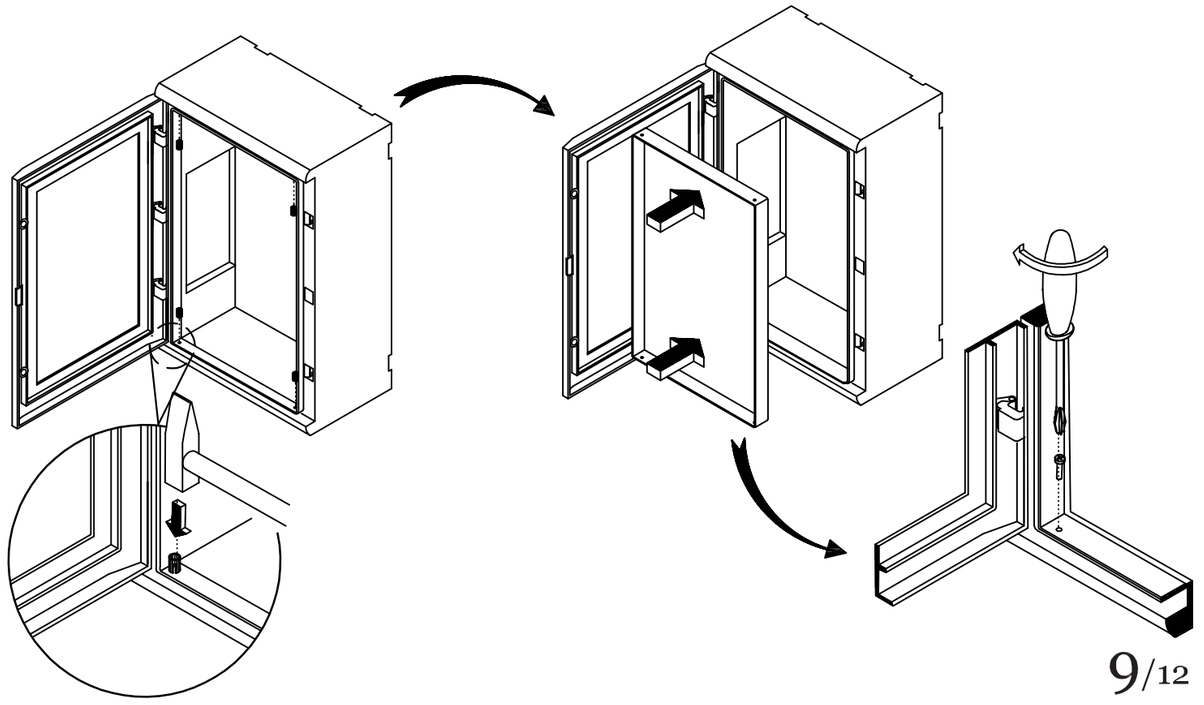

9/12

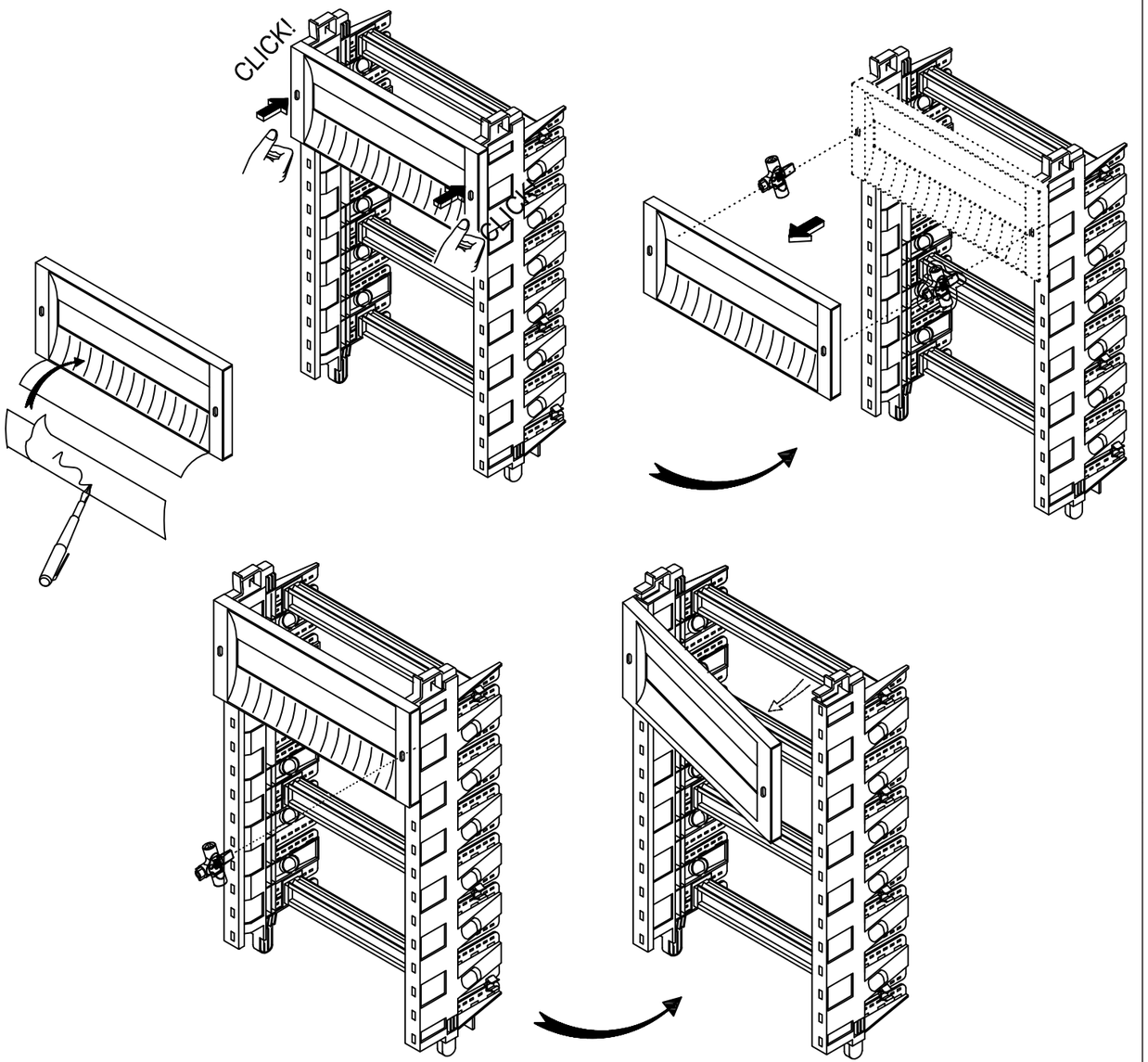
CLICK!
CLICK!

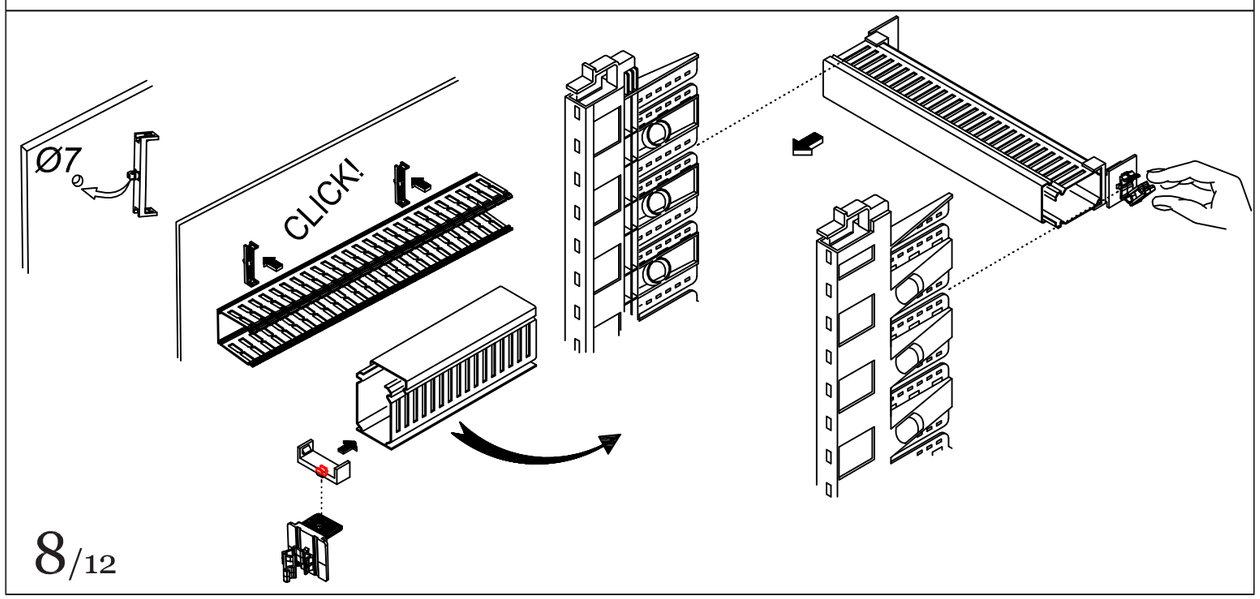
Ø7
CLICK!

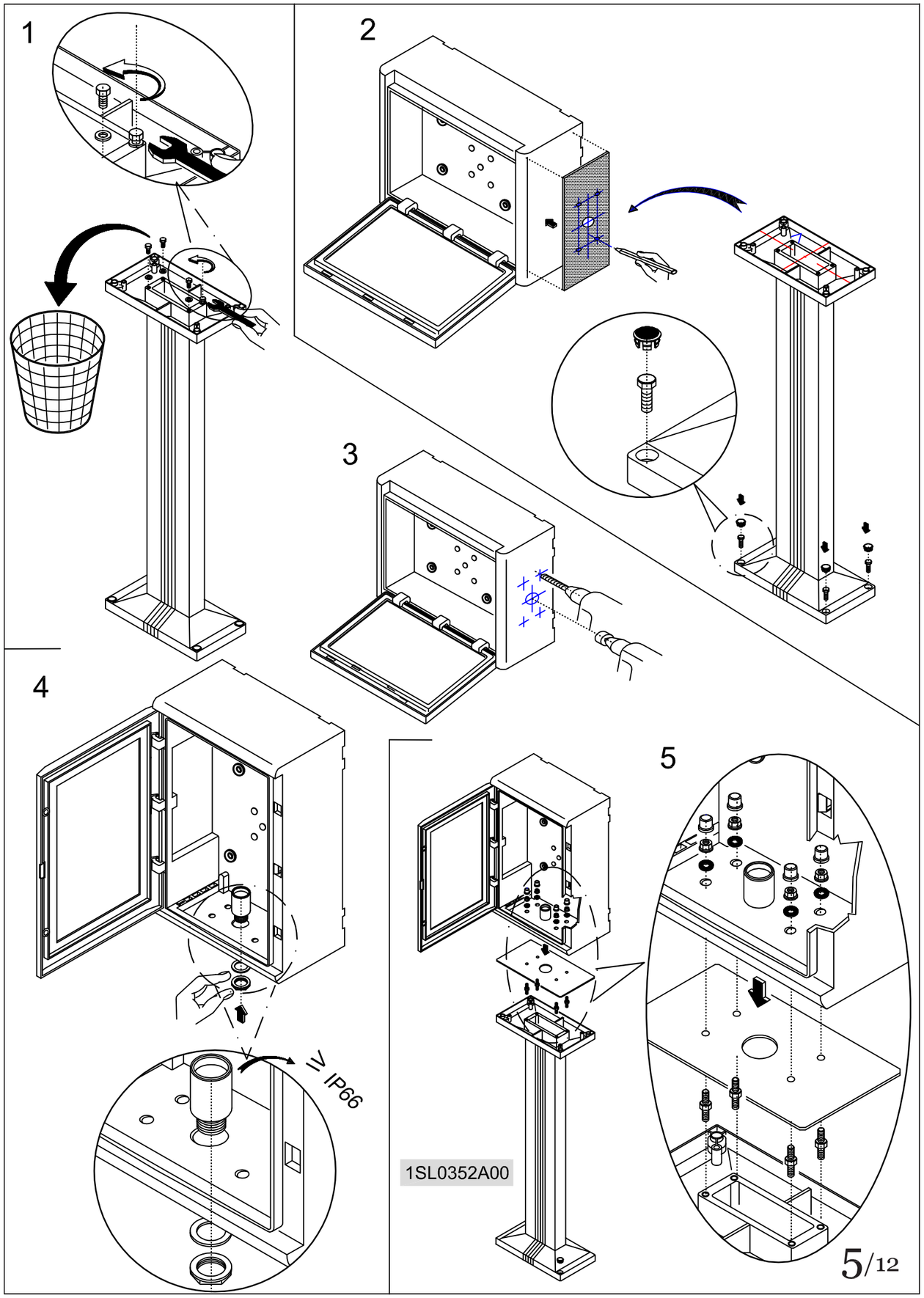
1
2
3
4
5
≥ IP66
1SL0352A00

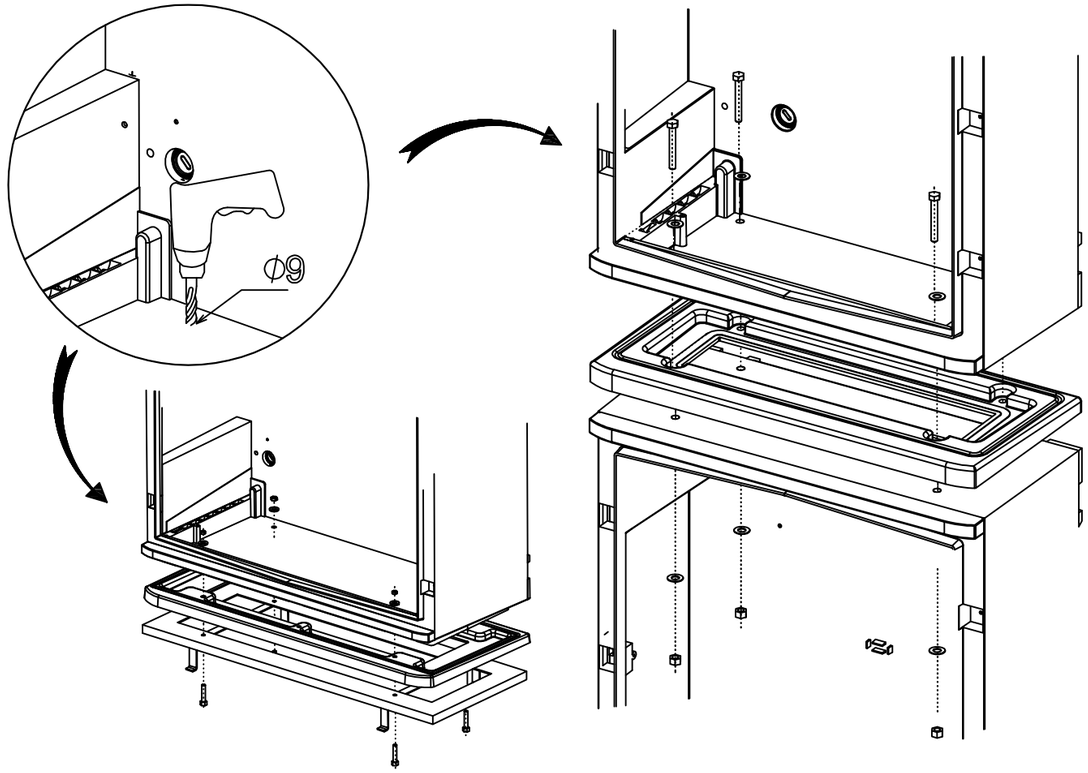

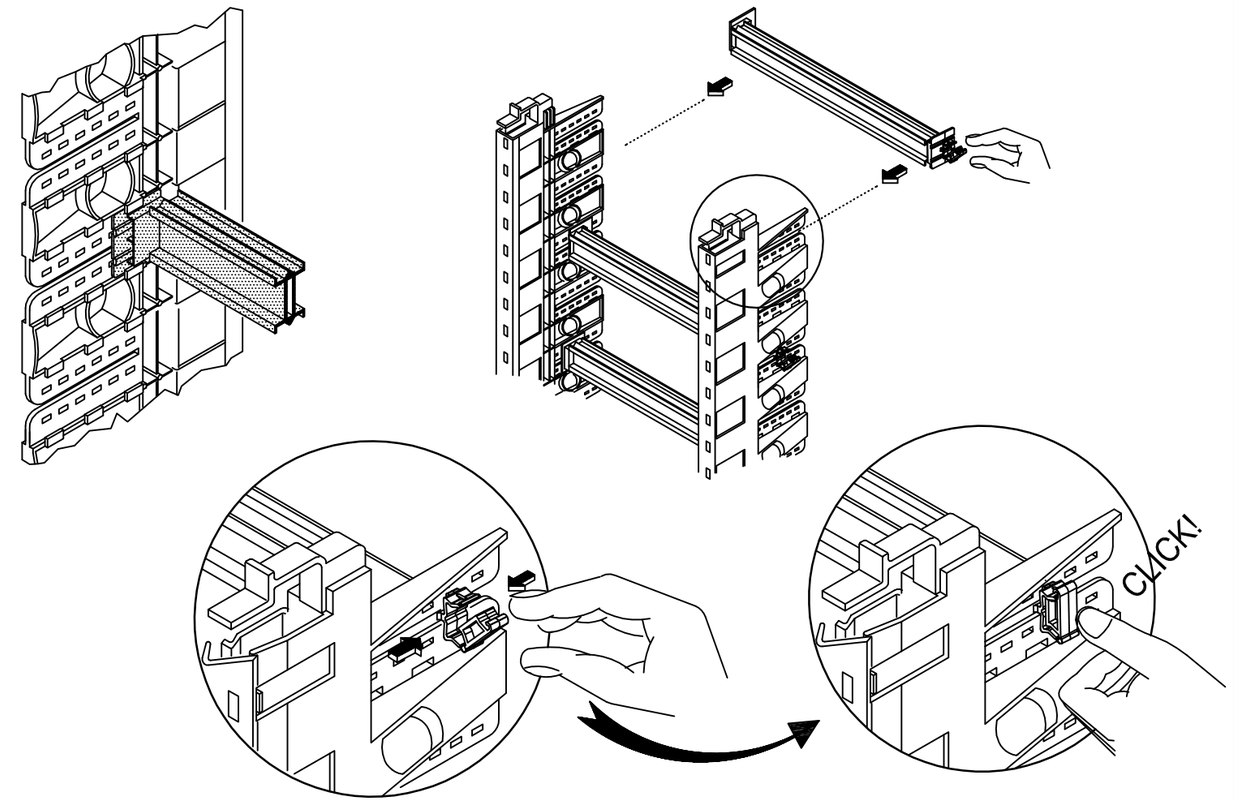



SX
L

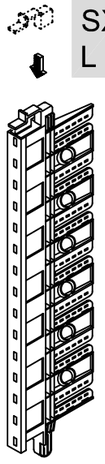

DX
R

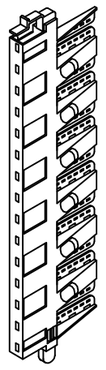

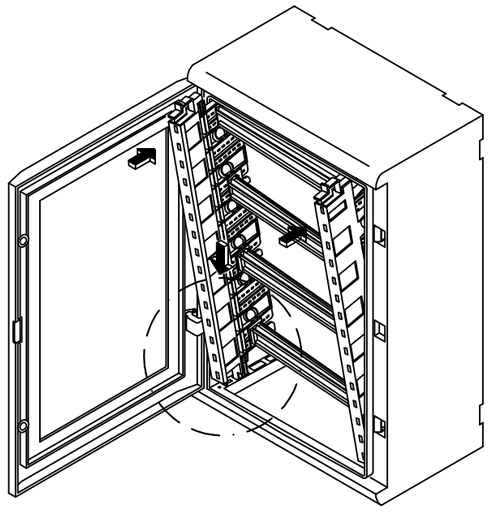

OK

