Ferrule fuse-links 8x32 gG 400VAC

LOW VOLTAGE IEC FUSES

IEC CYLINDRICAL FUSE-LINKS



Mersen aM and gG fuse-links cover a wide range of physical sizes and ampere ratings for 400, 500, and 690VAC for protection in electrical distribution circuits and various industrial applications. Most ratings are available in size 8x32 and size 10x38 with an optional indicator, and in size 14x51 and 22x58 with an optional striker to activate an auxiliary contact. Size 10x38 is also available with striker. All cylindrical fuse-links have ceramic bodies and silver-plated contacts.

Cylindrical fuse-links “gG” are used for the protection of cables, motors and LV-networks. They limit and cut off unacceptable overcurrents and short-circuit currents up to their nominal breaking capacity. Cylindrical fuse-links “gG” also protect electrical equipment and installations against the dynamic effect of high short-currents.

Our technology and process was designed to ensure highly reliable technical performance.

TECHNICAL DATA OVERVIEW

Voltage AC	400 VAC
Ampere Range (A)	0.5 ... 25 A
Speed/Characteristic	gG
I.R. AC (IEC)	20 kA
Body Material	Ceramic
Body Style	cylindrical
Contact Materials	Silver plated copper
Product Size	8x32 mm

FEATURES & BENEFITS

- Meet IEC, NFC and UNE standard
- Reduced size
- Full range protection
- Safest and most reliable protection system
- Visual indication of fuse operation

APPLICATIONS

- gG type for protection of line, cable against overload and short circuit in various industrial application and electrical distribution circuits.

STANDARDS

- IEC 60269-1 & -2

CE

©2025 Mersen. All rights reserved. Mersen reserves the right to change, adapt, limit or discontinue its products. Therefore the data provided herein are for information only and are not contractually binding. To ensure that Mersen provides the best solution to your needs, please contact and provide Mersen with all relevant technical specifications and conditions.

Ferrule fuse-links 8x32 gG 400VAC

PRODUCT RANGE

Size 8x32 400VAC gG without indicator



FR8GG40V4



FR8GG40V25

Catalog number	Item number	Rated voltage AC (IEC)	Rated current I_n	Rated breaking capacity AC	Power dissipation at I_n	Weight
FR8GG40V0.5	P218191	400 V	0.5 A	20 kA	0.55 W	4.4 g
FR8GG40V1	C218709	400 V	1 A	20 kA	0.35 W	4.4 g
FR8GG40V2	Q219227	400 V	2 A	20 kA	0.45 W	4.4 g
FR8GG40V4	W222958	400 V	4 A	20 kA	0.65 W	4.4 g
FR8GG40V6	A211025	400 V	6 A	20 kA	0.83 W	4.4 g
FR8GG40V8	B213096	400 V	8 A	20 kA	1 W	4.4 g
FR8GG40V10	A214613	400 V	10 A	20 kA	1.2 W	4.4 g
FR8GG40V12	R216146	400 V	12 A	20 kA	1.3 W	4.4 g
FR8GG40V16	P216650	400 V	16 A	20 kA	1.7 W	4.4 g
FR8GG40V20	F217677	400 V	20 A	20 kA	2 W	4.4 g
FR8GG40V25	D218710	400 V	25 A	20 kA	2.4 W	4.4 g

Size 8x32 gG 400VAC with indicator



FR8GG40V25I

Catalog number	Item number	Rated voltage AC (IEC)	Rated current I_n	Rated breaking capacity AC	Power dissipation at I_n	Weight
FR8GG40V2I	B222204	400 V	2 A	20 kA	0.45 W	4.4 g
FR8GG40V4I	X222959	400 V	4 A	20 kA	0.65 W	4.4 g
FR8GG40V6I	V201291	400 V	6 A	20 kA	0.83 W	4.4 g
FR8GG40V8I	B211026	400 V	8 A	20 kA	1 W	4.4 g
FR8GG40V10I	A212060	400 V	10 A	20 kA	1.2 W	4.4 g
FR8GG40V12I	C213097	400 V	12 A	20 kA	1.3 W	4.4 g
FR8GG40V16I	Y214105	400 V	16 A	20 kA	1.7 W	4.4 g
FR8GG40V20I	J215127	400 V	20 A	20 kA	2 W	4.4 g
FR8GG40V25I	S216147	400 V	25 A	20 kA	2.4 W	4.4 g

©2025 Mersen. All rights reserved. Mersen reserves the right to change, adapt, limit or discontinue its products. Therefore the data provided herein are for information only and are not contractually binding. To ensure that Mersen provides the best solution to your needs, please contact and provide Mersen with all relevant technical specifications and conditions.

TIME CURRENT CHARACTERISTIC CURVES

Size 8x32 400V gG

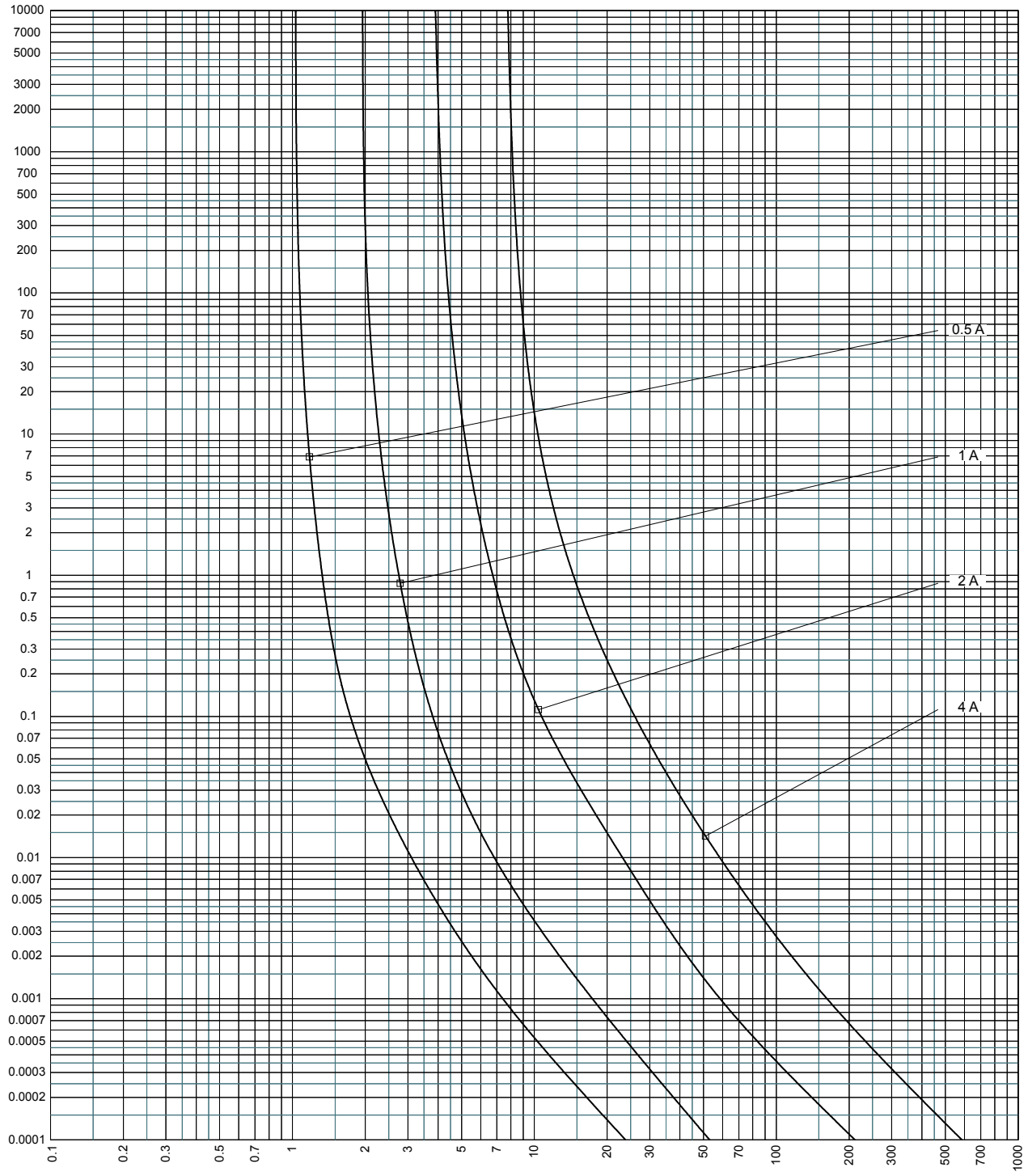

RMS value of pre-arcing/melting current (A) +- 8%

©2025 Mersen. All rights reserved. Mersen reserves the right to change, adapt, limit or discontinue its products. Therefore the data provided herein are for information only and are not contractually binding. To ensure that Mersen provides the best solution to your needs, please contact and provide Mersen with all relevant technical specifications and conditions.

TIME CURRENT CHARACTERISTIC CURVES

Size 8x32 400V gG

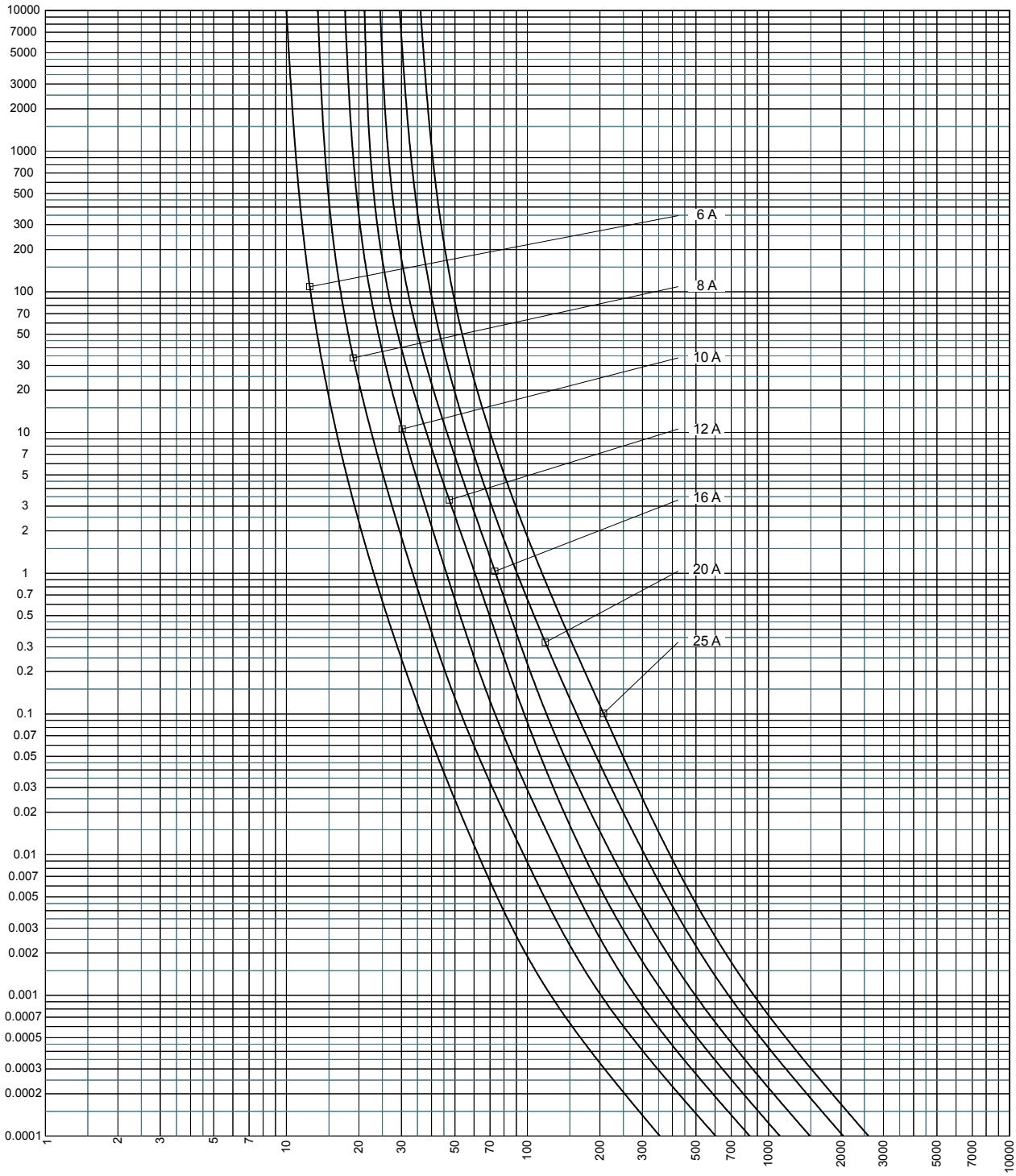

RMS value of pre-arcing/melting current (A) +- 8%

©2025 Mersen. All rights reserved. Mersen reserves the right to change, adapt, limit or discontinue its products. Therefore the data provided herein are for information only and are not contractually binding. To ensure that Mersen provides the best solution to your needs, please contact and provide Mersen with all relevant technical specifications and conditions.

CUT-OFF CURRENT CHARACTERISTIC

Size 8x32 400V gG

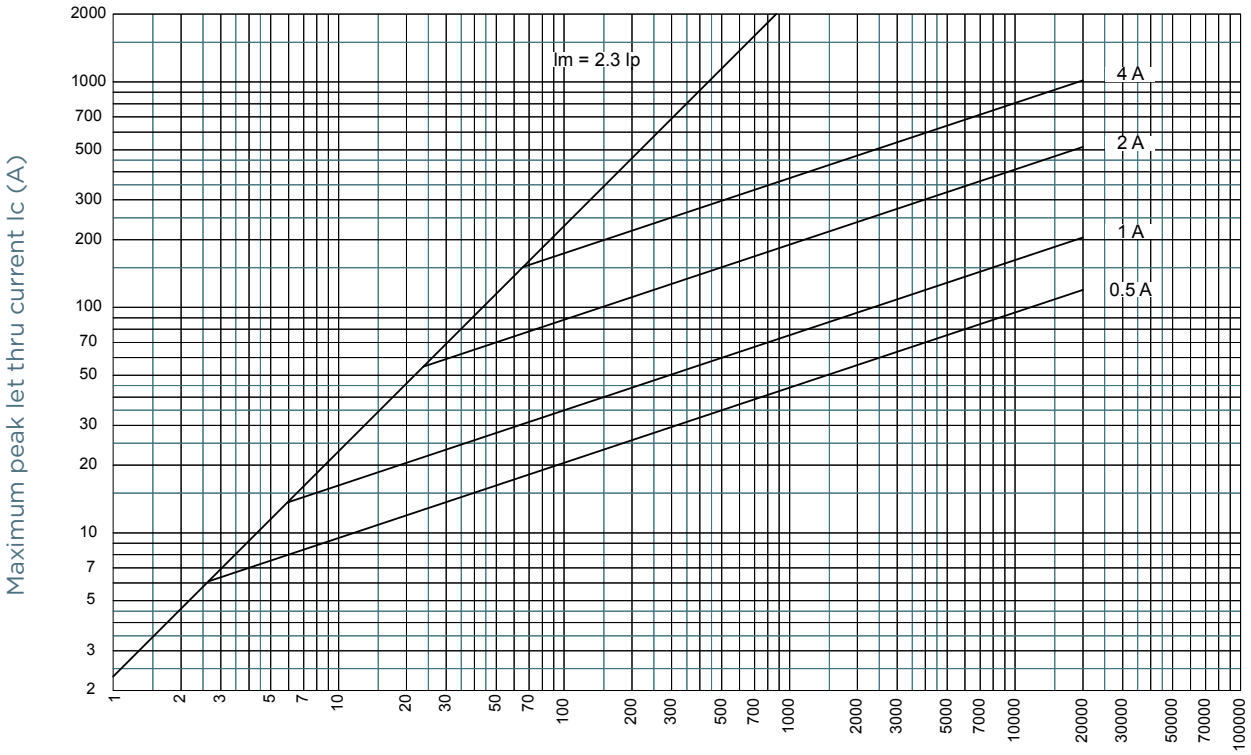

Size 8x32 400V gG

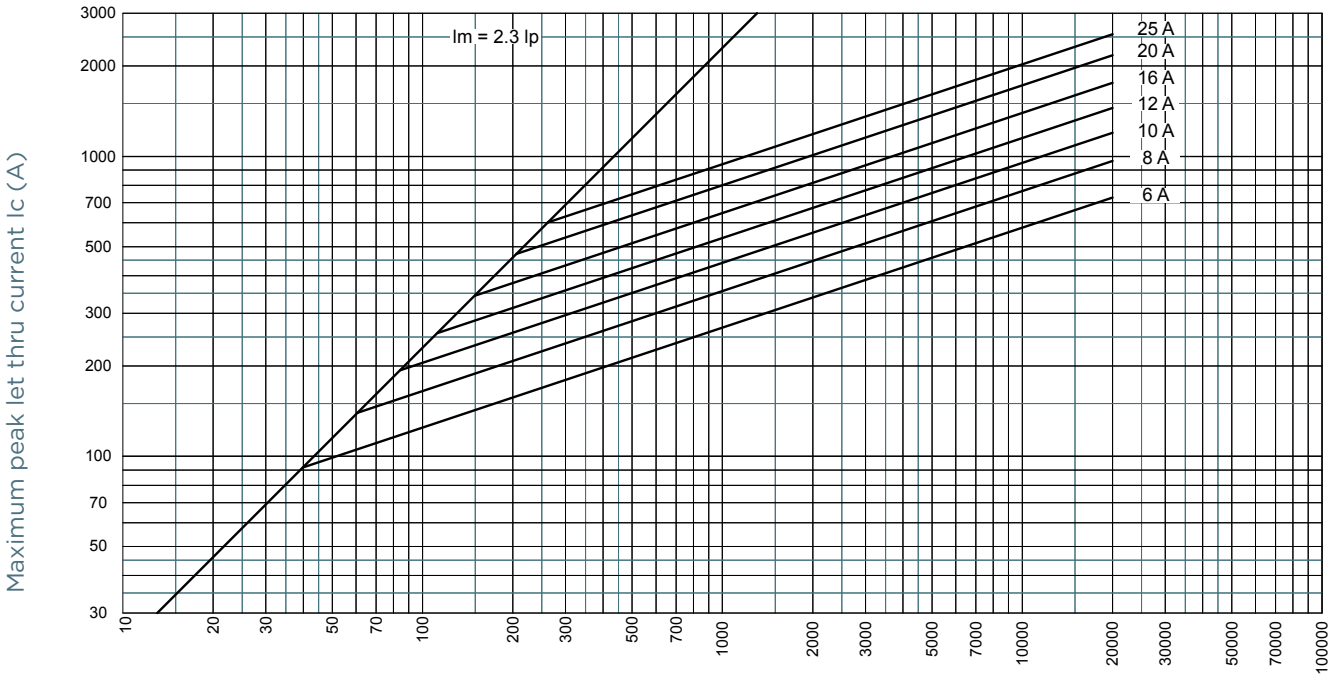

MERSEN.COM

©2025 Mersen. All rights reserved. Mersen reserves the right to change, adapt, limit or discontinue its products. Therefore the data provided herein are for information only and are not contractually binding. To ensure that Mersen provides the best solution to your needs, please contact and provide Mersen with all relevant technical specifications and conditions.

MERSEN Expertise, our source of energy

PRE-ARCING AND OPERATING I²T CHARACTERISTICS

Size 8x32 400V gG

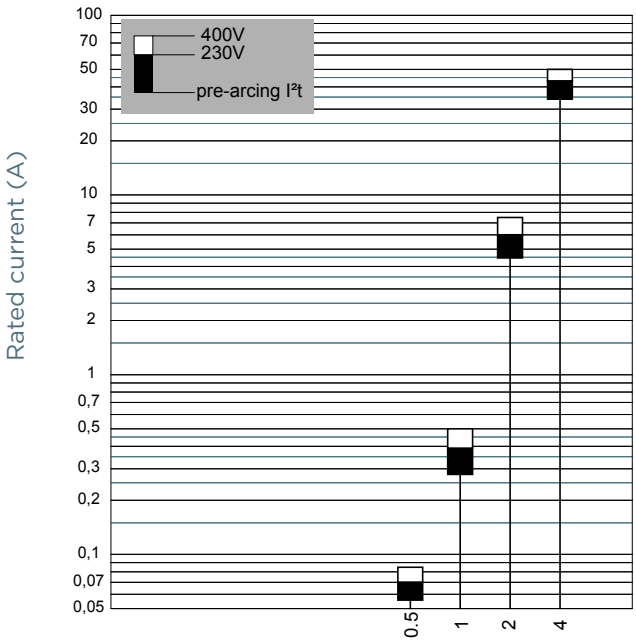

Size 8x32 400V gG

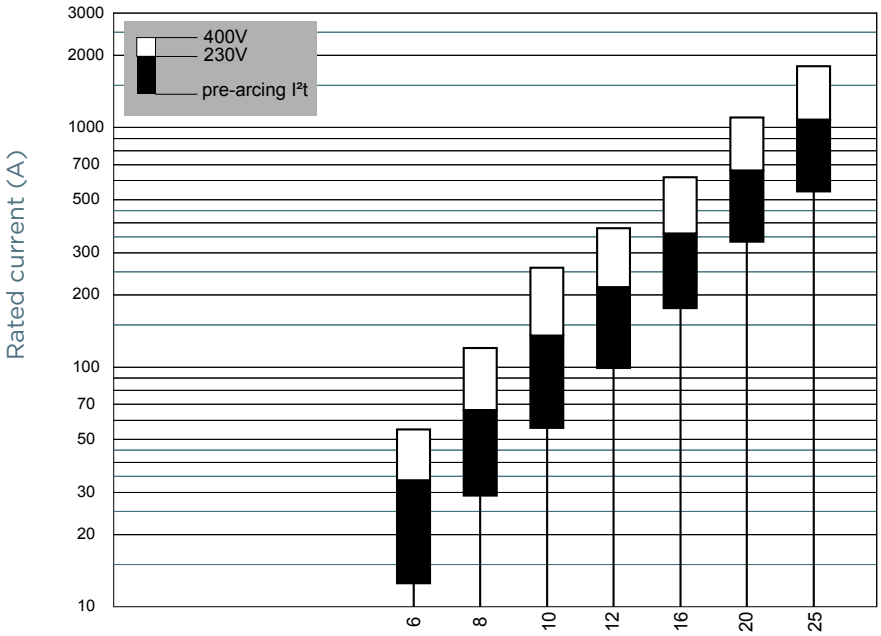

©2025 Mersen. All rights reserved. Mersen reserves the right to change, adapt, limit or discontinue its products. Therefore the data provided herein are for information only and are not contractually binding. To ensure that Mersen provides the best solution to your needs, please contact and provide Mersen with all relevant technical specifications and conditions.

DIMENSIONS

Size 8x32 gG without indicator (1001204)

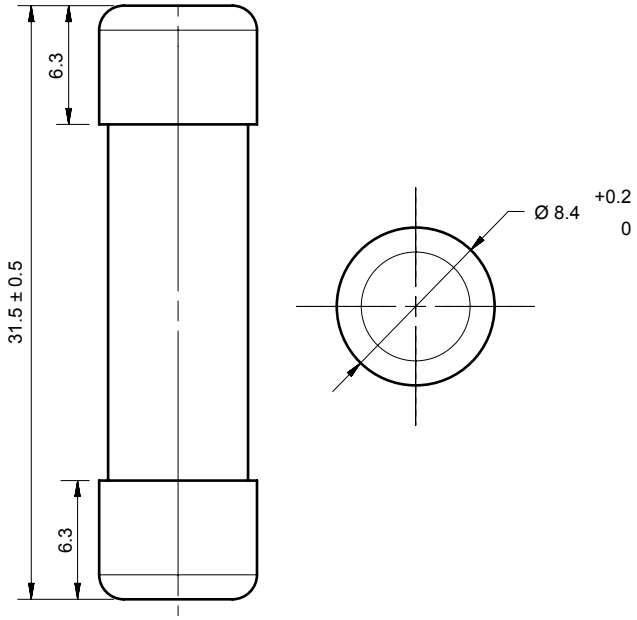

Dimensions in mm

Size 8x32 gG with indicator (1001203)

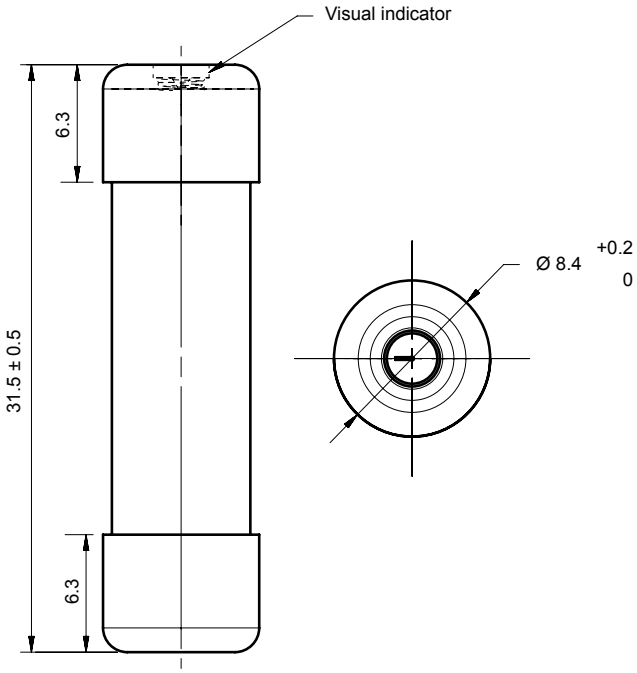

Dimensions in mm

MERSEN.COM

©2025 Mersen. All rights reserved. Mersen reserves the right to change, adapt, limit or discontinue its products. Therefore the data provided herein are for information only and are not contractually binding. To ensure that Mersen provides the best solution to your needs, please contact and provide Mersen with all relevant technical specifications and conditions.

Expertise, our source of energy