

Enclosed switches

Load break switches

20 to 1600 A



COMO *enclosure 20 to 125 A*
Polycarbonate - IP65



SIRCO *enclosure 160 to 630 A*
Polyester - IP65



SIRCO M *enclosure 32 to 100 A*
Stainless steel - IP65



SIRCO M *enclosure 20 to 100 A*
Painted steel - IP65



SIRCO *enclosure 160 to 1600 A*
Painted steel - IP65

The solution for

- OEM
- Industries
- Commercial buildings
- Electrical distribution

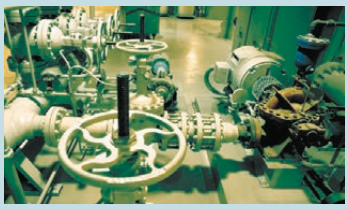

Strong points

- Safe operation
- Suitable for all kinds of environment
- Easy setup
- Extensive range

Compliance with standards

- IEC 60947-3
- IEC 60364
- EN 60947-3
- EN 61439
- EN 60204-1

Other products

- Customised solutions available on request.

Function

Enclosed load break switches ensure the on-load breaking and making of circuits and safely isolate all low-voltage electrical circuits by providing protection against contact with live parts and environmental elements, such as dust, water and other hazards.

They enable the shutdown and isolation of the power supply as close to the equipment as possible.

Advantages

Safe operation

- Secures transfer for mechanical or electrical work.
- On-load breaking.
- Ergonomic control lever, available in red/yellow or black.
- Triple lock in OFF position.

Suitable for all kinds of environment

- Insulating enclosure for chemical and food processing applications, indoor or outdoor installation.
- Painted steel enclosure for areas at risk of mechanical impact.
- Stainless enclosure for food processing and pharmaceutical applications.

Easy setup

- Cable access top and/or bottom.
- Pre-drilled cable glands (up to 125 A).
- Removable steel cable glands, top and bottom (> 125 A), aluminium coated (> 630 A).
- Plenty of room for cabling.



Extensive range

- Standard range
- Customised on request.

socomec Innovative Power Solutions

Load break switch in isolating enclosure

■ *COMO* in polycarbonate enclosure



General characteristics

- From 20 to 125 A.
- 3, 4, 6, 8 poles.
- Yellow/red or grey/blue lever.
- Triple lock in OFF position.
- Polycarbonate enclosure.
- Screw-on front.
- Colour: RAL 7035.
- Degree of protection: IP65.
- Pre-drilled cable-in holes at top and bottom.

Accessories

- Unswitched neutral pole optional extra (max. 1).
- NO+NC or 2 NO auxiliary contact.

References

Rating (A)	N° of poles	Grey/blue lever Reference	Red/yellow lever Reference	Extra pole (1) (connected)	Auxiliary contacts (1)
20	3 P	2115 **3301**	2115 **3401**	-	-
	4 P	2115 **4301**	2115 **4401**		
25	3 P	2115 **3302**	2115 **3402**	2115 **5005**	1 AC NO+NC 2113 **4001** 1 AC 2 NO 2113 **4002**
	4 P	2115 **4302**	2115 **4402**		
32	3 P	2115 **3303**	2115 **3403**		
	4 P	2115 **4303**	2115 **4403**		
	6 P	2115 **6303**	2115 **6403**		
	8 P	2115 **8303**	2115 **8403**		
40	3 P	2115 **3304**	2115 **3404**	2115 **5007**	
	4 P	2115 **4304**	2115 **4404**		
63	3 P	2115 **3306**	2115 **3406**		
	4 P	2115 **4306**	2115 **4406**		
	6 P	2115 **6306**	2115 **6406**		
	8 P	2115 **8306**	2115 **8406**		
80	3 P	2115 **3308**	2115 **3408**	2115 **5009**	
	4 P	2115 **4308**	2115 **4408**		
100	3 P	2115 **3309**	2115 **3409**	2115 **5011**	
	4 P	2115 **4309**	2115 **4409**		
125	3 P	2115 **3312**	2115 **3412**		
	4 P	2115 **4312**	2115 **4412**		

Enclosure		
Size	H x W x D (mm)	Cable-in top and bottom (mm)
CPC 0	92 x 64 x 83	2 x Ø 25
CPC 1	163 x 100 x 115	2 x Ø 25
CPC 2	200 x 146 x 150	2 x Ø 32 + 2 x Ø 40
CPC 1	163 x 100 x 115	2 x Ø 25
CPC 2	200 x 146 x 150	2 x Ø 32 + 2 x Ø 40
CPC 3	304 x 214 x 182	2 x Ø 50 + 2 x Ø 63
CPC 2	200 x 146 x 150	2 x Ø 32 + 2 x Ø 40
CPC 3	304 x 214 x 182	2 x Ø 50 + 2 x Ø 63

(1) Max. setup: 1 extra pole + 1 aux contact, or 2 aux contacts

Enclosed switches

Load break switches

20 to 1600 A

Load break switch in isolating enclosure

■ *SIRCO* in polyester enclosure



coff_584_front.psd

General characteristics

- From 160 to 630 A.
- 3 poles + unswitched neutral, 4 poles.
- Black lever (yellow/red on request).
- Triple lock in OFF position.
- Polyester enclosure.
- Screw-on front.
- Colour: RAL 7035.
- Degree of protection: IP65.
- Wall-mounted, 4 brackets included.

Accessories

- NO/NC auxiliary contact.
- Terminal screen.

References

Rating (A)	N° of poles	Handle Black Reference	Auxiliary contacts	Protective screen	Enclosure Size	Enclosure H x W x D (mm)
160	3 P + N	3116 **5016**	1st AC NO/NC 2699 **0031**	2698 **3012**	CP 32	360 x 270 x 171
	4 P	3116 **4016**		2698 **4012**		
250	3 P + N	3116 **5025**		2698 **3020**	CP 53	540 x 360 x 171
	4 P	3116 **4025**		2698 **4020**		
400	3 P + N	3116 **5040**	2e AC 2 NO/NC 2699 **0032**	2698 **3050**	CP 75	720 x 540 x 201
	4 P	3116 **4040**		2698 **4050**		
630	3 P + N	3116 **5063**		2698 **3050**		
	4 P	3116 **4063**		2698 **4050**		

Load break switch in metallic enclosure

■ *SIRCO M* in painted steel enclosure



coff_587_front.psd

General characteristics

- From 20 to 100 A.
- 3 poles + solid neutral, unswitched 4th pole optional extra (max. 1).
- Yellow/red or black lever.
- Triple lock in OFF position.
- Painted steel enclosure.
- Door latch system or screw-on.
- Colour: RAL 7035.
- Pre-drilled cable-in holes at top and bottom.
- Degree of protection: IP65.

Accessories

- 4th pole switched (max. 1), unswitched (max. 1).
- NO+NC or 2 NO auxiliary contact (max. 2).
- Terminal shroud.
- Wall brackets

References

Rating (A)	N° of poles	Handle Black Reference	Handle Red/Yellow Reference	Extra pole (unswitched pole)	Auxiliary contacts	Terminal shroud	Bracket kit	Enclosure Size	Enclosure H x W x D (mm)	Enclosure Cable-in top and bottom (mm)
20	3 P + N	3032 **5002**	3032 **5102**	2200 **1001**	1 AC NO + NC 2299 **0001**	2294 **3005** (3 P) 2294 **1005** (1 P)	3031 **0011**	CT 21	200 x 150 x 120	2 x Ø 25 + 2 x Ø 32 + Ø 16
	3 P + N	3032 **5202** (1)	3032 **5302** (1)					CT 21a		
32	3 P + N	3032 **5003**	3032 **5103**	2200 **1003**				CT 21		
	3 P + N	3032 **5203** (1)	3032 **5303** (1)					CT 21a		
63	3 P + N	3032 **5006**	3032 **5106**	2200 **1006**	1 AC 2 NO 2299 **0011**	2294 **3009** (3 P) **2294 1009** (1 P)		CT 21		
	3 P + N	3032 **5206** (1)	3032 **5306** (1)					CT 21a		
100	3 P + N	3032 **5010**	3032 **5110**	2200 **1010**		2294 **3016** (3 P) 2294 **1011** (1 P)		CT 32	300 x 200 x 120	Ø 32 + 2 x Ø 50 + Ø 16
	3 P + N	3032 **5210** (1)	3032 **5310** (1)					CT 32a		

(1) Front panel: screw-on

socomec Innovative Power Solutions

Load break switch in metallic enclosure (continued)

■ *SIRCO* in painted steel enclosure



coff_566_front.psd

General characteristics

- From 160 to 1600 A.
- 3 poles + solid neutral , 4 poles.
- Black lever (yellow/red on request).
- Triple lock in OFF position.
- Painted steel enclosure.
- Door latch system.
- Colour: RAL 7035.
- Cable gland plates: top and bottom.
- Degree of protection: IP65.
- Wall-mounted, 4 brackets included.

Accessories

- NO/NC auxiliary contact.
- Terminal screen.

References

Rating (A)	N° of poles	Handle Black Reference	Auxiliary contacts	Protective screen (top or bottom)
160	3 P + N	3032 **5016**	1st AC NO/NC 2699 **0031** 2nd AC 2 NO/NC 2699 **0032**	2698 **3012**
	4 P	3032 **4016**		2698 **4012**
250	3 P + N	3032 **5025**		2698 **3020**
	4 P	3032 **4025**		2698 **4020**
400	3 P + N	3032 **5040**		2698 **3050**
	4 P	3032 **4040**		2698 **4050**
630	3 P + N	3032 **5063**		2698 **3050**
	4 P	3032 **4063**		2698 **4050**
800	3 P + N	3032 **5080**		2698 **3080**
	4 P	3032 **4080**		2698 **4080**
1250	3 P + N	3032 **5084**		2698 **3120**
	4 P	3032 **4084**		2698 **4120**
1600	3 P + N	3032 **5088**		2698 **3120**
	4 P	3032 **4088**		2698 **4120**

Enclosure		
Size	H x W x D (mm)	Cable-in top and bottom (mm)
CT 43	400 x 300 x 210	180 x 100
CT 66	600 x 600 x 300	380 x 100
CT 86	800 x 600 x 350	560 x 100
CT 128	1200 x 800 x 300	660 x 100

Load break switch in metallic enclosure (continued)

■ *SIRCO M* in stainless steel enclosure



General characteristics

- 32 to 100A.
- 3 poles + solid neutral, 4th switched pole optional extra (max. 1).
- Yellow/red or black lever.
- Triple lock in OFF position.
- Brushed stainless steel enclosure 304 (please ask for other options).
- Degree of protection: IP65.
- Pre-drilled cable-in holes at bottom.
- Door latch system.

Accessories

- 4th switched pole (max. 1), connected (max. 1).
- NO+NC or 2 NO auxiliary contact (max. 2).
- Wall brackets.

References

Rating (A)	N° of poles	Handle Black Reference	Handle Red/Yellow Reference	Extra pole (switched pole)	Auxiliary contacts	Terminal shroud	Set of stainless steel brackets	Enclosure Size	Enclosure H x W x D (mm)	Enclosure Cable-in bottom (mm)
32	3 P + N	3032 **8003**	3032 **8103**	2200 **1003**	1 AC NO + NC 2299 **0001** 1 AC 2 NO 2299 **0011**	2294 **3005** (3 P) 2294 **1005** (1 P)	3031 **0012**	CI 21	200 x 150 x 120	2 x Ø 25 + 2x Ø 32 + Ø 16
63	3 P + N	3032 **8006**	3032 **8106**	2200 **1006**		2294 **3009** (3 P) 2294 **1009** (1 P)				
100	3 P + N	3032 **8010**	3032 **8110**	2200 **1010**		2294 **3016** (3 P) 2294 **1011** (1 P)		CI 32	300 x 200 x 120	Ø 32 + 2 x Ø 50 + Ø 16

Characteristics

Electrical features according to IEC 60947-3

		COMO CS							
Thermal current I_{th} (40°C)		**20 A**	**25 A**	**32 A**	**40 A**	**63 A**	**80 A**	**100 A**	**125 A**
Enclosed thermal current I_{th} (35°C) (A)		20	25	32	40	63	80	100	125
Enclosed thermal current I_{th} (50°C) (A)		17	22	28	35	54	69	86	108
Rated insulation voltage U_i (V)		690	690	690	690	690	690	690	690
Rated impulse withstand voltage U_{imp} (kV)		4	6	6	6	6	6	6	6
Rated operational currents I_e (A)									
Rated voltage	**Utilisation category**								
400 VAC	AC-22 A / AC-22 B	20	25	32	40	63	80	100	125
400 VAC	AC-23 A / AC-23 B	15	20	22	40	44	53	70	84
690 VAC	AC-22 A / AC-22 B		12	13	18	22	23.5	34	41
690 VAC	AC-23 A / AC-23 B		9.5	11.5	13	17.5	22	25.5	35
Operational power in AC-23 (kW)									
400 VAC without pre-break AC (kW)(5)		7.5	9.5	11.5	20	22	30	37	45
690 VAC without pre-break AC (kW)(5)			12	13	18	22	25.5	34	41
gG DIN(6) fuse protected short-circuit withstand									
Prospective short-circuit current (kA rms)		1	8	8	8	8	10	20	20
Associated fuse rating (A)		20	25	32	40	63	80	100	125
Circuit breaker protected short-circuit withstand with any circuit breaker that ensures tripping in less than 0.3s									
Current rated as short-time withstand Icw 0.3s (kA rms)		0.68	0.68	1.28	1.28	2.52	2.52	4	4
Short-circuit operation (switch only)									
Current rated as short-time withstand Icw 1s (kA rms)		0.34	0.34	0.64	0.64	1.26	1.26	2	2
Connection									
Minimum Cu cable cross-section (mm^2)		1.5	2.5	2.5	2.5	2.5	2.5	4	4
Maximum Cu cable cross-section (mm^2)		4	10	10	10	16	25	35	50

		SIRCO M / SIRCO										
Thermal current I_{th} (40°C)		**20 A**	**32 A**	**63 A**	**100 A**	**160 A**	**250 A**	**400 A**	**630 A**	**800 A**	**1250 A**	**1600 A**
Frame size		**M1**	**M1**	**M2**	**M3**	**B3**	**B4**	**B5**	**B5**	**B6**	**B7**	**B7**
Enclosed thermal current I_{th} (35°C) (A)		20	32	63	100	160	250	400	630	770	1000	1450
Enclosed thermal current I_{th} (50°C) (A)		17	28	54	86	138	216	345	544	665	863	1252
Rated insulation voltage U_i (V)		800	800	800	800	800	800	1000	1000	1000	1000	1000
Rated impulse withstand voltage U_{imp} (kV)		8	8	8	8	8	8	12	12	12	12	12
Rated operational currents I_e (A)												
Rated voltage	**Utilisation category**											
415 VAC	AC-22 A / AC-22 B	20	32	63	100	160	250	400	630	800	1250	1600
415 VAC	AC-23 A / AC-23 B	20	32	63	100	160	250	400	500	800	1250	1250
500 VAC	AC-22 A / AC-22 B	20	32	63	100							
500 VAC	AC-23 A / AC-23 B	20	25	63	80							
690 VAC	AC-22 A / AC-22 B	20	32	40/63	80/100							
690 VAC	AC-23 A / AC-23 B	20	25	40	63							
Operational power in AC-23 (kW)												
400 VAC without pre-break AC (kW)(5)		9	15	30	45	80	132	220	280	450	710	710
500 VAC without pre-break AC (kW)(5)		9	15	30	45							
690 VAC without pre-break AC (kW)(5)		11	15	30	45							
gG DIN(6) fuse protected short-circuit withstand												
Prospective short-circuit current (kA rms)		50	50	50	25	100	50	100	70	50	100	100
Associated fuse rating (A)		20	32	63	100	160	250	400	630	800	1250	2x800
Circuit breaker protected short-circuit withstand with any circuit breaker that ensures tripping in less than 0.3s												
Current rated as short-time withstand Icw 0.3s (kA rms)		2.5	2.5	3	5	15	17	25	25	50	100	100
Short-circuit operation (switch only)												
Current rated as short-time withstand Icw 1s (kA rms)		1.26	1.26	1.5	2.75	7	9	13	13	35	50	50
Dynamic withstand current in Icc (kA peak) (6)		6	6	9	12	20	30	45	45	55	110	110
Connection												
Minimum Cu cable cross-section (mm^2)		1.5	1.5	2.5	10	50	95	185	2x150	2x185		
Maximum Cu cable cross-section (mm^2)		16	16	35	70	95	150	240	2x300	2x300	4x185	6x185

Enclosed switches

Load break switches

20 to 1600 A

Dimensions

Size CPC 0

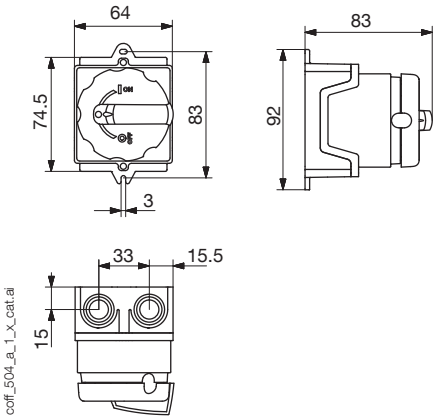

- 4x M25 pre-drilled holes (top and bottom)

Size CPC 1

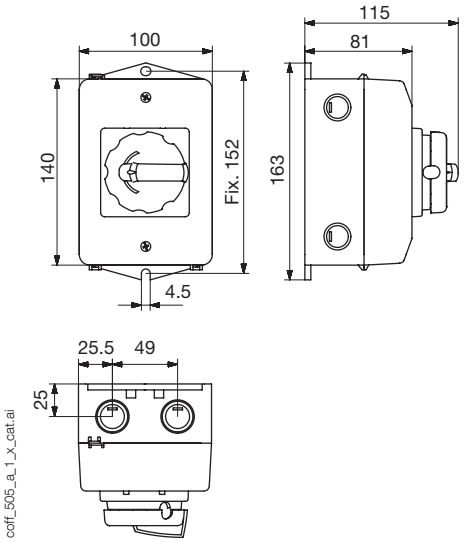

- 4x M20 pre-drilled holes (on the side)
- 4x M25 pre-drilled holes (top and bottom)
- 4 pre-drilled holes to expel water

Size CPC 2

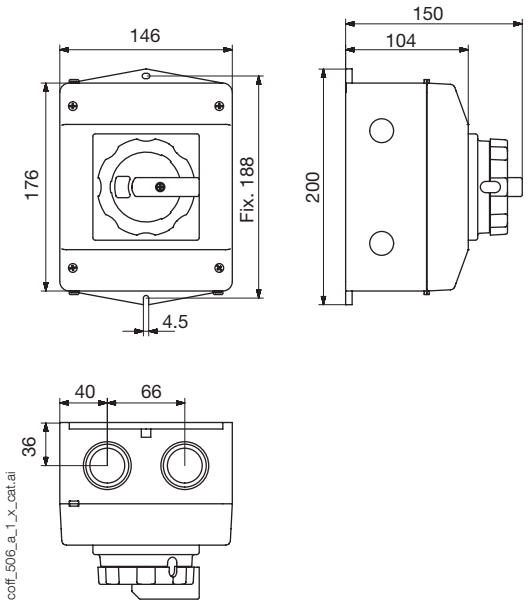

- 4x M20 pre-drilled holes (on the side)
- 4 M32/M40 pre-drilled holes (top and bottom)
- 2 pre-drilled holes to expel water

Size CPC 3

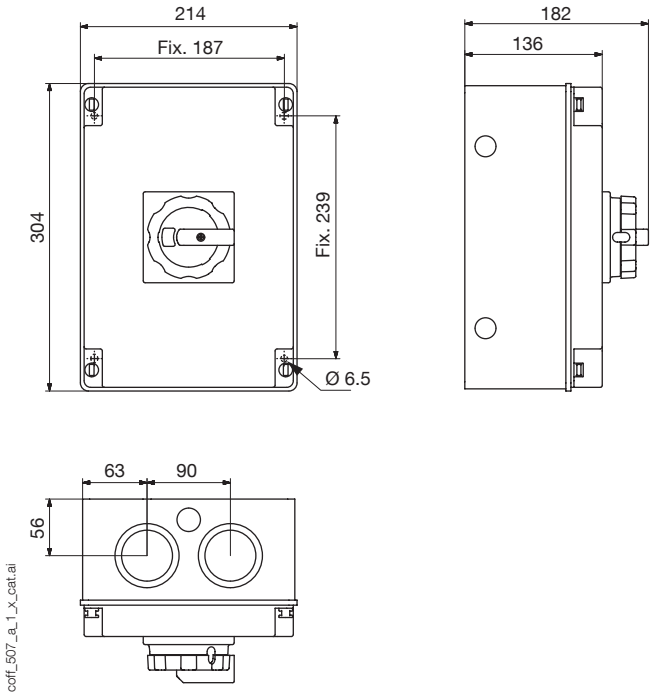

- 4x M20 pre-drilled holes (on the side)
- 4x M50/M63 pre-drilled holes and 2x M20 pre-drilled holes (on the side)
- 2 pre-drilled holes to expel water

socomec Innovative Power Solutions

Enclosures

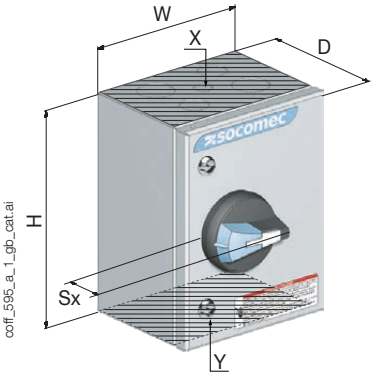

Size	Type	H x W x D (mm)	Sx (mm)	A (mm)	B (mm)	Diameter C (mm)	X - Y Cable-in top and bottom(1)
CT 21, CI21, CT 21a	1	200 x 150 x 120	36	135	85	6.5	2 x Ø 25 + 2 x Ø 32 + Ø 16
CT 32, CI32, CT 32a		300 x 200 x 120		235	135		1 x Ø 32 + 2 x Ø 50 + Ø16
CP 32	3	360 x 270 x 171	45	337	247		–
CP 53		540 x 360 x 171		516	337		
CP 75		720 x 540 x 201		696	516		
CT 43	2	400 x 300 x 210		362	262	12.5	180 x 100
CT 66		600 x 600 x 300		562	562		380 x 100
CT 86		800 x 600 x 350	60	762	562		
CT 128		1200 x 800 x 300		1162	762		660 x 100

(1) For stainless steel enclosure, cable-in at bottom only

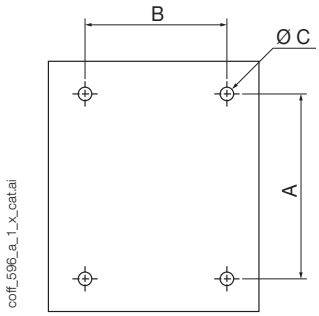

Type 1

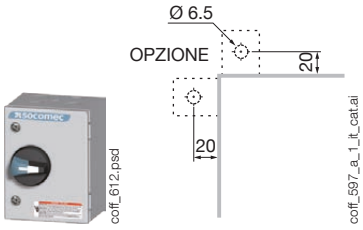

Type 2

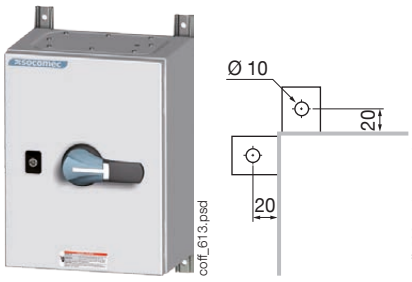

Type 3

