Mini free-standing Beacons / Permanent Light 213

Permanent Beacon WM 12-230VAC/DC YE



Part No.: 213.300.00

MECHANICAL DATA	
Height	107 mm
Diameter	57 mm
Materials	PA-GF PC
Dome colour	Yellow
Housing colour	Black
Protection category	IP65
Connection	Spring-type terminal
cross-sectional area maximum	2,50mm² / 14AWG
Cable entry	Screwed cable gland
Cable entry minimum	d = 3 mm
Cable entry maximum	d = 6 mm
Tension relief	Present (conforms to VDE)
Type of fixing	Wall mounting
Working temperature minimum	-20°C
Working temperature maximum	+50°C
Weight with packaging	60 g
Product weight	60 g

ELECTRICAL DATA	
Operating voltage	12-230V
Operating voltage type	AC/DC
Protection class	Protection class 2
Pollution degree	3
Overvoltage category	II
Isolation voltage	Ui = 250V; Uimp = 2.500V

OPTICAL DATA	
Light colour	Yellow
Service life optical	depends on bulb

APPROVAL DATA	
Conforms with CE	Yes
WEEE	Yes
Conforms with ATEX-directive	No
Conforms with CCC	Yes
Conforms with UL	cULus
UL Type Rating	Type 12
Conforms with FCC	No

! For additional installation and mounting information, refer to the appropriate user guide at www.werma.com. This printed copy is for information only and is subject to alteration.

Mini free-standing Beacons / Permanent Light 213

Permanent Beacon WM 12-230VAC/DC YE

Conforms with IC	No
EAC certificate available	Yes
Conforms with AS-I	No
ICAO Certification	No
Conforms with DNV	No
Conforms with RoHS CN	No
Conforms with VdS	No

DRAWING

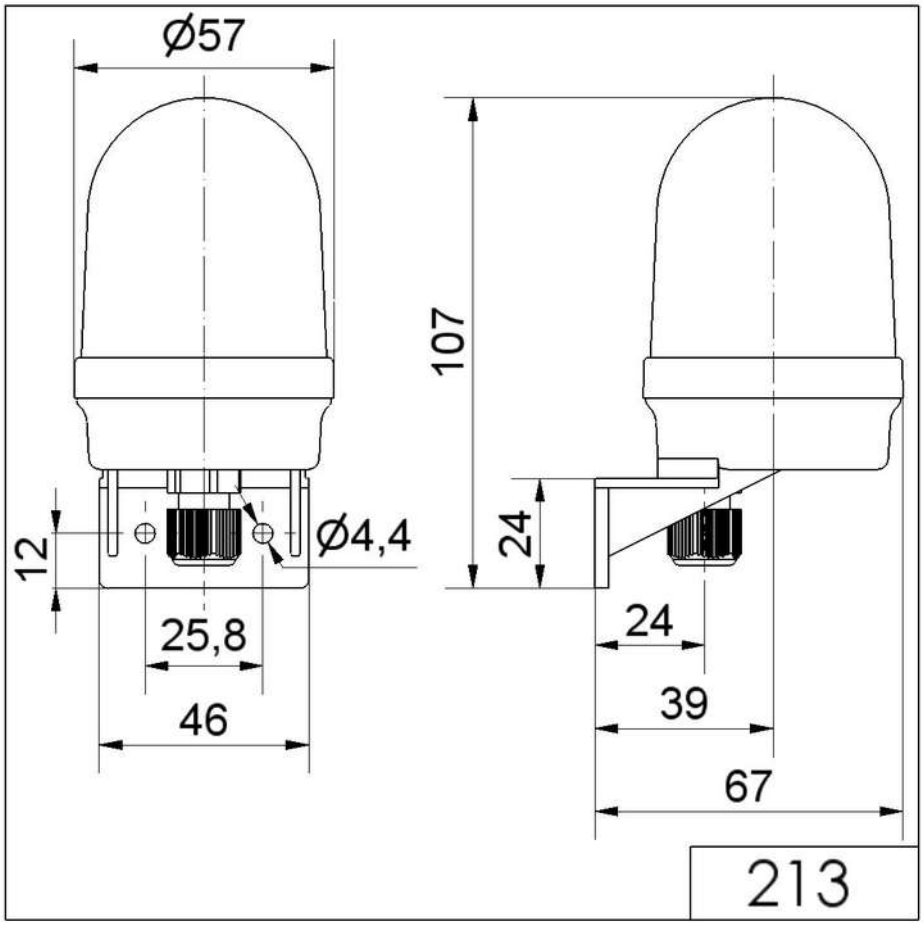

! For additional installation and mounting information, refer to the appropriate user guide at www.werma.com. This printed copy is for information only and is subject to alteration.