Industrial Ethernet Cable
TPE Cable Jacket
RSS-RJ45S-841-3M

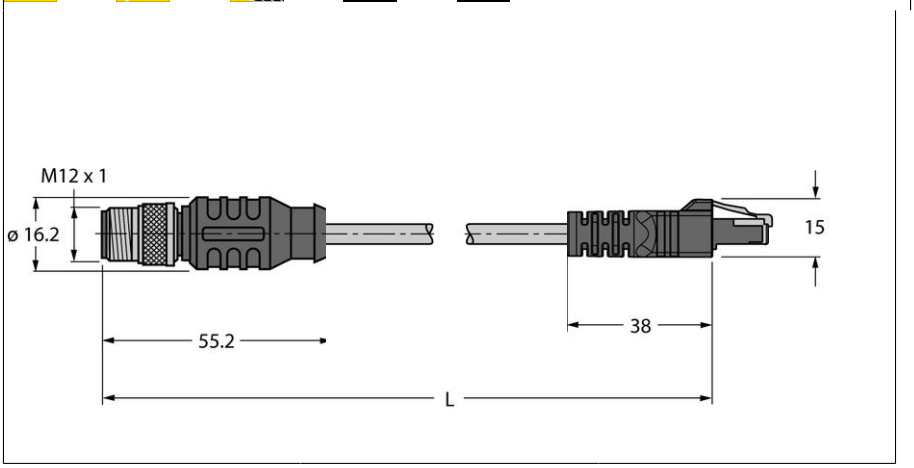

- **Ethernet cable: 8-pin, AWG 24, shielded**
- **Sheath material: TPE, color: green**
- **Sheath diameter: 7.7 mm**
- **Qualified for drag chain use**
- **UL approval**
- **RJ45 male, straight, 8-pin**
- **M12 male, straight, 8-pin**
- **Cable length: 3.0 m**

Cable Cross-section

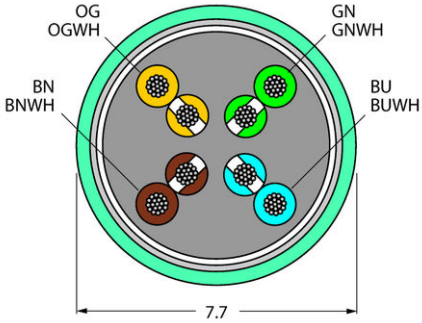

Pin Assignment Left

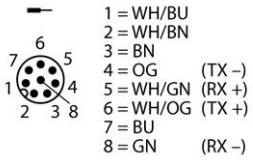

Type designation	RSS-RJ45S-841-3M
Ident no.	6611339
Connector A side	Connector, M12 1, Straight
Number of pins	8
Contacts	Metal, CuZn, Gold-plated
Contact carriers	Plastic, TPU, Black
Grip	Plastic, TPU, Black
Coupling nut/screw	Brass, CuZn, Nickel-plated
Protection class	IP67, A + B side screwed together
Tightening torque	0.8 … 1 Nm (observe max. torque of counter piece!)
Mechanical lifespan	> 100 Mating cycles
Pollution degree	3
Connector B side	Connector, RJ45, Straight
Number of pins	8 pins
Contacts	metal, CuSn, Gold-plated
Contact carriers	Plastic, PC, Transparent
Grip	plastic, TPU, black
Protection class	IP20
Cable	841
Cable type	Ethernet
Cable diameter	7.7mm
Cable length	3 m
Cable jacket	TPE, Green
Shielding	yes
Bending radius (flexible use)	> 10 x Ø
Core insulation	PE
Core colors	WH/BU, WH/BN, BN, OG, WH/GN, WH/OG, BU, GN
Core cross-section	8x0.21mm^2
DC resistance (loop)	94 Ω /km
Nom. impedance	100 (1 MHz) Ω
Nom. capacitance	46 pF/m
Rated voltage	60 V
Ambient temperature	
Stationary	-40…+80°C
In motion	-40…+80°C
Approvals	UL
Qualified for drag chain use	yes
UV resistance	yes
resistance to oil	yes
Current	2 A

Edition • 2017-04-03T04:17:10+02:00

 Hans Turck GmbH & Co.KG • D-45472 Mülheim an der Ruhr • Witzlebenstraße 7 • Tel. 0208 4952-0 • Fax 0208 4952-264 • more@turck.com • www.turck.com