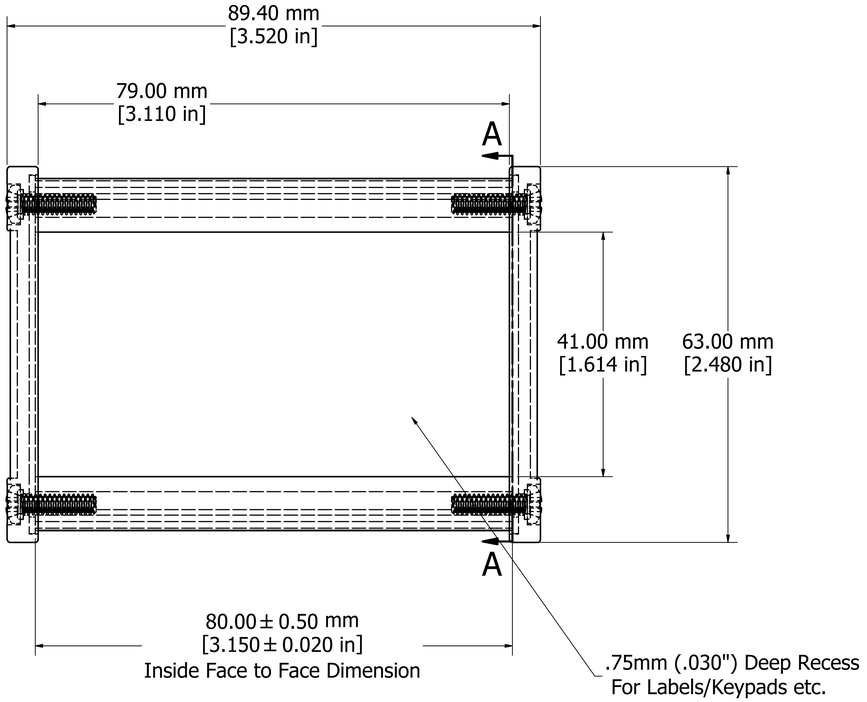

ASSEMBLY - TOP VIEW

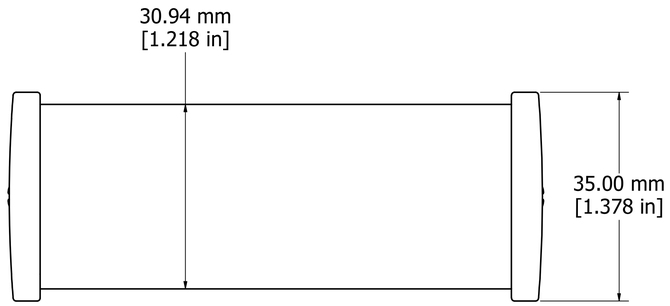

ASSEMBLY - SIDE VIEW

Fits 80mm (3.149") X 55.0mm (2.165") PCB

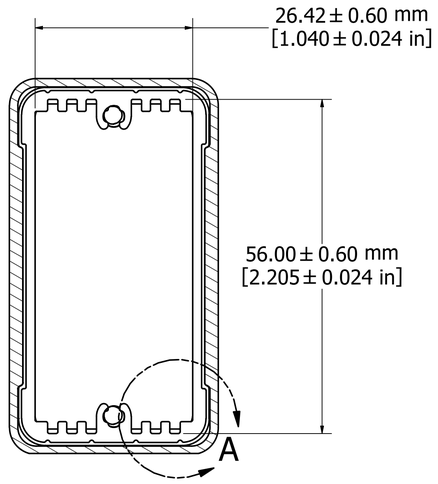

SECTION A-A

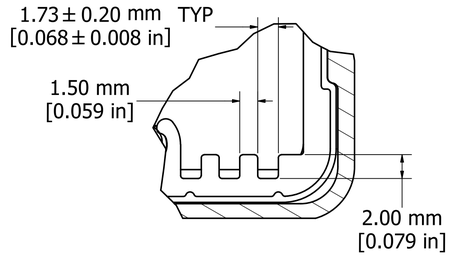

DETAIL A

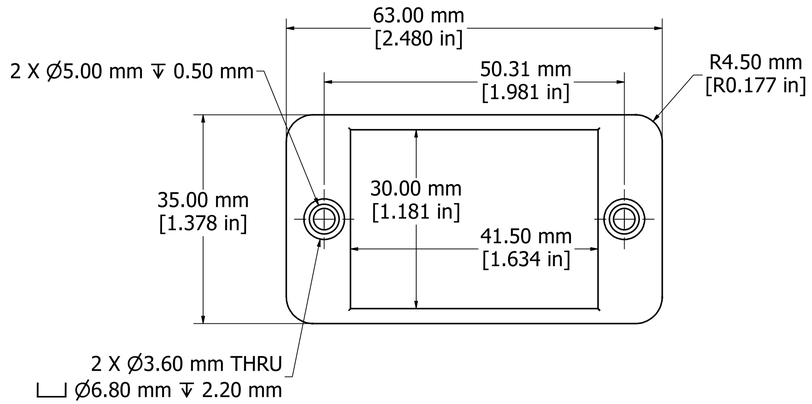

END PANEL - VIEW FROM OUTSIDE

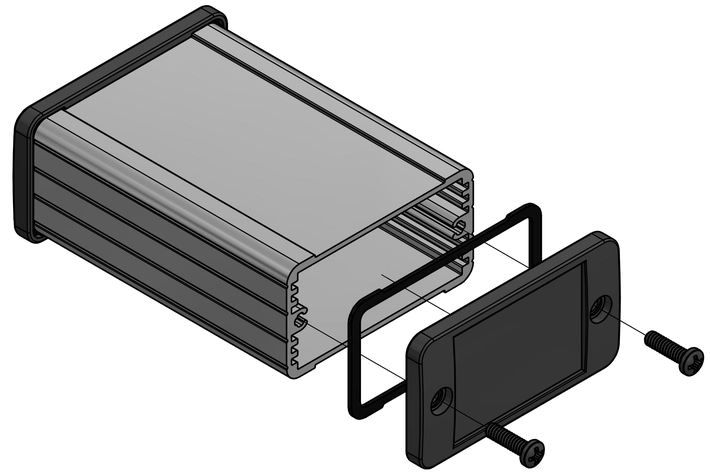

PROTECTION TO IP 65

Enclosures can be Factory Modified (Milling, Drilling, Printing etc.)
Contact Factory mjm@hammondmfg.com for quotes
Solid models of this enclosure available in STEP or IGES.

NOTE
Purchased assembly includes box, end panels, #6 Taptight screws with o-rings, self adhesive rubber feet, and gaskets
Box made from Extruded Aluminum 6063.
End panels made from Type 380 Diecast Aluminum with a black powder paint finish.

WATERPROOF 1457C801	
PART NUMBERS	
Clear anodized box with black powder painted end panels	1457C801
Black powder painted box and end panels	1457C801BK
EMI/RFI SHIELDED (IP 54)	
Clear anodized box with black powder painted end panels	1457C801E
Black powder painted box and end panels	1457C801EBK
ACCESSORIES	
See website for accessories.	

HAMMOND MANUFACTURING™

1457C801

www.hammondmfg.com