HF18FH MINIATURE INTERMEDIATE POWER RELAY

File No.:E133481

File No.: 40010932

File No.:CQC02001002553



Features

- 7A switching capability
- 1.5kV dielectric strength (between coil and contacts)
- 2 to 4 pole configurations
- Various terminals, test button available
- Gold plated contact available
- Sockets available
- Environmental friendly product (RoHS compliant)
- Outline Dimensions: (28.0 x 21.5 x 36.0) mm

CONTACT DATA

Contact arrangement	2C, 3C	4C
Contact resistance	100mΩ (at 1A 6VDC)	
Contact material	Silver alloy	
Contact rating (Res. load)	7A 250VAC/30VDC	5A 250VAC/30VDC
Max. switching voltage	250VAC / 30VDC	
Max. switching current	7A	5A
Max. switching power	210W / 1750VA	150W / 1250VA
Mechanical endurance	2×10^7 OPS	
Electrical endurance	1×10^5 OPS (See approval reports for more details)	

CHARACTERISTICS

Insulation resistance		1000MΩ (at 500VAC)
Dielectric strength	Between coil & contacts	1500VAC 1min
	Between open contacts	1000VAC 1min
	Between contact sets	1500VAC 1min
Operate time (at nomi. volt.)		25ms max.
Release time (at nomi. volt.)		25ms max.
Temperature rise (no-load, at nomi.volt.)		60K max.
Shock resistance	Functional	98m/s²
	Destructive	980m/s²
Vibration resistance		10Hz to 55Hz 1mm DA
Humidity		95% RH, 40°C
Ambient temperature		-40°C to 70°C
Termination		PCB, Plug-in
Unit weight		Approx. 37g
Construction		Dust protected

Notes: The data shown above are initial values.

COIL

Coil power	DC type: 0.9 to 1.1W; AC type: 1.2 to 1.8VA

COIL DATA at 23°C

Nominal Voltage VDC	Pick-up Voltage VDC	Drop-out Voltage VDC	Max. Allowable Voltage VDC	Coil Resistance Ω
5	4.0	0.50	5.5	27.5 x (1±10%)
6	4.8	0.60	6.6	40 x (1±10%)
12	9.6	1.20	13.2	160 x (1±10%)
24	19.2	2.40	26.4	650 x (1±10%)
48	38.4	4.80	52.8	2600 x (1±15%)
110	88.0	11.0	121	11000 x (1±15%)

Nominal Voltage VAC	Pick-up Voltage VAC	Drop-out Voltage VAC	Max. Allowable Voltage VAC	Coil Resistance Ω
6	4.80	1.80	6.6	11.5 x (1±10%)
12	9.60	3.60	13.2	46 x (1±10%)
24	19.2	7.20	26.4	184 x (1±10%)
48	38.4	14.4	52.8	735 x (1±10%)
120	96.0	36.0	132	4550 x (1±15%)
220/240	176.0	66.0	264	14400 x (1±15%)

SAFETY APPROVAL RATINGS

UL&CUL	2C: 7A 250VAC/30VDC 4C: 5A 250VAC/30VDC
TÜV	2C, 3C: 7A 250VAC/30VDC 4C: 5A 250VAC/30VDC

Notes: Only some typical ratings are listed above. If more details are required, please contact us.

ORDERING INFORMATION

	HF18FH /	A	012	-2Z	1	G	D	(XXX)

Type

Coil voltage form **A:** AC **Nil:** DC

Coil voltage **DC:** 5 to 110VDC **AC:** 6 to 240VAC

Contact arrangement **2Z:** 2 Form C **3Z:** 3 Form C **4Z:** 4 Form C

Mounting Termination (See the Following) **1:** Socket **2:** PCB

Contact material **G:** Silver alloy + Au plated **Nil:** Silver alloy

LED **D:** With LED **Nil:** Without LED

Customer special code

Notes: We also can supply the special type with terminals numbered 1,4,5,8,9,12,13,14 for 2 poles.

OUTLINE DIMENSIONS, WIRING DIAGRAM AND PC BOARD LAYOUT

Unit: mm

Outline Dimensions

HF18FH/ □□□□ -2Z1□□ / 3Z1□□

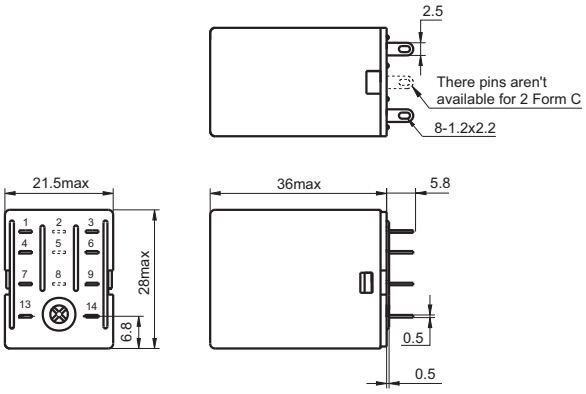

HF18FH/ □□□□ -2Z2□□ / 3Z2□□

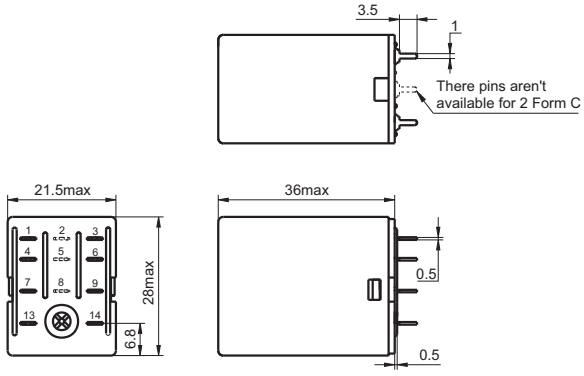

HF18FH/ □□□□ - 4Z1□□

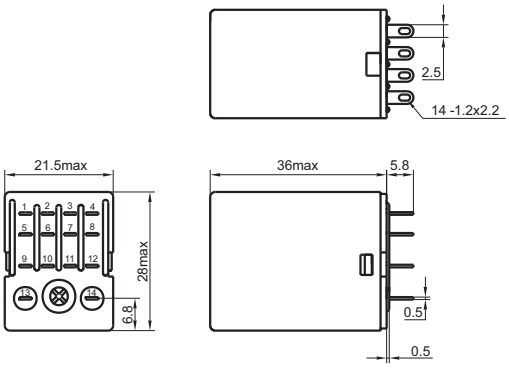

HF18FH/ □□□□ - 4Z2□□

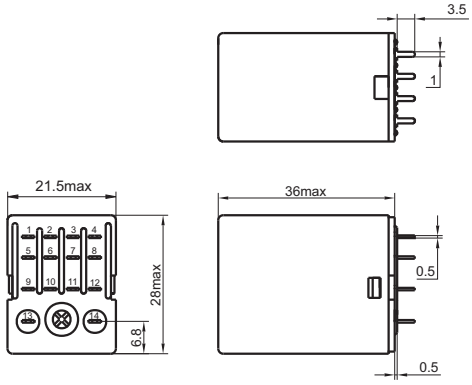

OUTLINE DIMENSIONS, WIRING DIAGRAM AND PC BOARD LAYOUT

Unit: mm

PCB Layout

(Bottom view)

2 From C

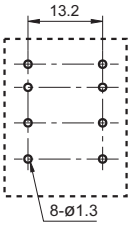

3 From C

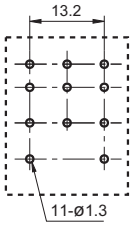

4 From C

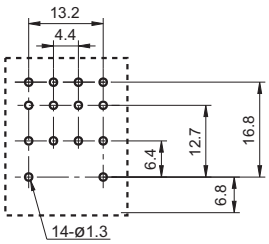

Wiring Diagram

(Bottom view)

2 From C

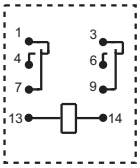

3 From C

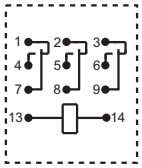

4 From C

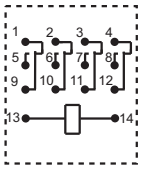

2 From C (With LED)

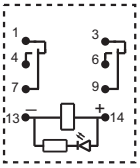

3 From C (With LED)

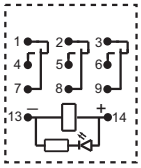

4 From C (With LED)

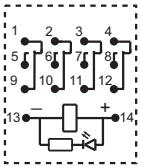

Remark: For AC parts with diode, the positive and negative pole markings on wiring diagram are not applicable.

2 From C
(DC, With fly-wheel diode)

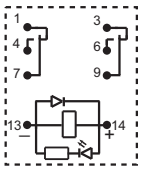

3 From C
(DC, With fly-wheel diode)

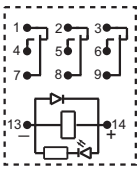

4 From C
(DC, With fly-wheel diode)

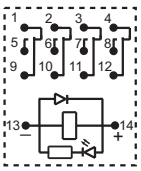

Remark: 1) In case of no tolerance shown in outline dimension: outline dimension ≤1mm, tolerance should be ±0.2mm; outline dimension >1mm and ≤5mm, tolerance should be ±0.3mm; outline dimension >5mm, tolerance should be ±0.4mm.

2) The tolerance without indicating for PCB layout is always ±0.1mm.

CHARACTERISTIC CURVES

MAXIMUM SWITCHING POWER
(2, 3 Form C)

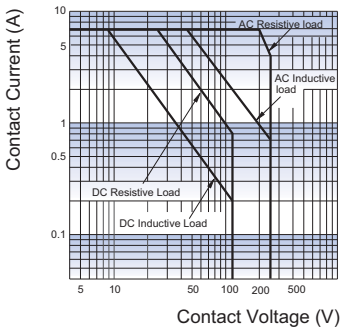

MAXIMUM SWITCHING POWER
(4 Form C)

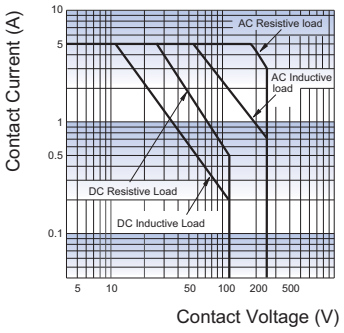

Disclaimer

This datasheet is for the customers' reference. All the specifications are subject to change without notice.
We could not evaluate all the performance and all the parameters for every possible application. Thus the user should be in a right position to choose the suitable product for their own application. If there is any query, please contact Hongfa for the technical service. However, it is the user's responsibility to determine which product should be used only.

© Xiamen Hongfa Electroacoustic Co., Ltd. All rights of Hongfa are reserved.