JUMO GmbH & Co. KG
Delivery address: Mackenrodtstraße 14,
36039 Fulda, Germany
Postal address: 36035 Fulda, Germany
Phone: +49 661 6003-0
Fax: +49 661 6003-607
e-mail: mail@jumo.net
Internet: www.jumo.net

JUMO Instrument Co. Ltd.
JUMO House
Temple Bank, Riverway
Harlow, Essex CM 20 2TT, UK
Phone: +44 1279 635533
Fax: +44 1279 635262
e-mail: sales@jumo.co.uk
Internet: www.jumo.co.uk

JUMO Process Control, Inc.
8 Technology Boulevard
Canastota, NY 13032, USA
Phone: 315-697-JUMO
1-800-554-JUMO
Fax: 315-697-5867
e-mail: info@jumo.us
Internet: www.jumo.us

Push-in RTD temperature probe with terminal head form J

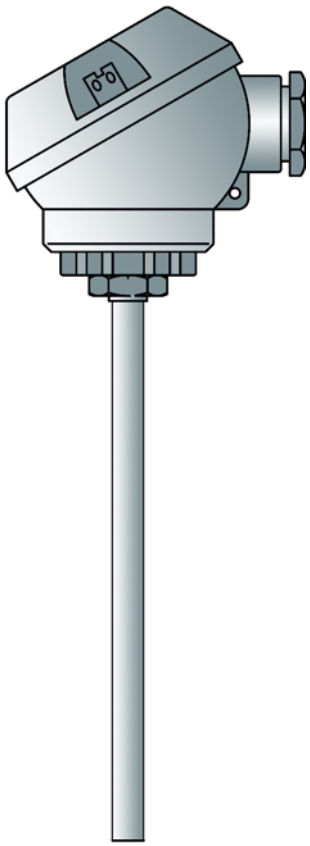

- **for temperatures from -50 ... +400°C**
- **As single or double RTD temperature probes**
- **Available with transmitter**
- **Protection class IP65**

Push-in RTD temperature probes are preferentially used for measuring temperatures in liquids and gases. A decisive selection criterion is the reliable sealing feature of this installation type with vacuum and with overpressure. The application areas are, among others, in the air conditioning technology and refrigeration engineering as well as the HVAC, kiln and apparatus engineering sector.

The measuring insert is normally fitted with a Pt 100 temperature sensor according to DIN EN 60 751, Class B in 2-wire circuit; versions with Pt 500 or Pt 1000 temperature sensors can also be supplied, as well as 3- and 4-wire circuit connections. A transmitter can be optionally integrated into the connection head.

Technical Data

Terminal head	Form J, die-cast aluminum, M 16x1.5; IP65, ambient temperature -40 ... +100°C Caution: reduced ambient temperature range when using transmitters, Data Sheet 70.7030
Process connection	Metal flange Ø 6mm, Ø 8mm, galvanized steel Thermowell screw-connection Ø 6mm, Ø 8mm, stainless steel Thermowell screw-connection, spring loaded Ø 8mm, spring deflection 12mm, stainless steel
Thermowell	Stainless steel 1.4571, Ø 6mm and Ø 8mm
Measuring insert	Pt 100 temperature sensor according to DIN EN 60 751, Class B, two-wire circuit
Transmitter	Analog transmitter, 4 ... 20mA output, Data sheet 70.7030
Accessories	Thermowell, Data Sheet 90.2440 and 90.9721

JUMO GmbH & Co. KG
Delivery address: Mackenrodtstraße 14,
36039 Fulda, Germany
Postal address: 36035 Fulda, Germany
Phone: +49 661 6003-0
Fax: +49 661 6003-607
e-mail: mail@jumo.net
Internet: www.jumo.net

JUMO Instrument Co. Ltd.
JUMO House
Temple Bank, Riverway
Harlow, Essex CM 20 2TT, UK
Phone: +44 1279 635533
Fax: +44 1279 635262
e-mail: sales@jumo.co.uk
Internet: www.jumo.co.uk

JUMO Process Control, Inc.
8 Technology Boulevard
Canastota, NY 13032, USA
Phone: 315-697-JUMO
1-800-554-JUMO
Fax: 315-697-5867
e-mail: info@jumo.us
Internet: www.jumo.us

Dimensions

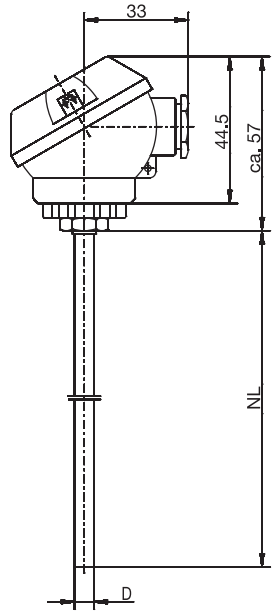

Type 902130/10

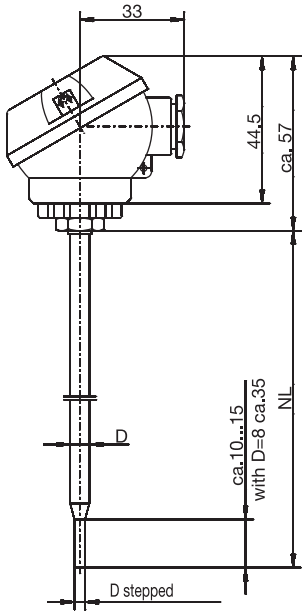

Type 902130/11

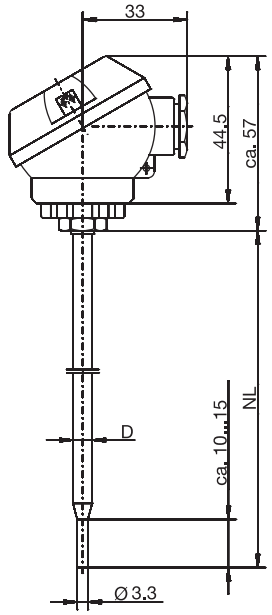

Type 902130/31

JUMO GmbH & Co. KG
Delivery address: Mackenrodtstraße 14, 36039 Fulda, Germany
Postal address: 36035 Fulda, Germany
Phone: +49 661 6003-0
Fax: +49 661 6003-607
e-mail: mail@jumo.net
Internet: www.jumo.net

JUMO Instrument Co. Ltd.
JUMO House
Temple Bank, Riverway
Harlow, Essex CM 20 2TT, UK
Phone: +44 1279 635533
Fax: +44 1279 635262
e-mail: sales@jumo.co.uk
Internet: www.jumo.co.uk

JUMO Process Control, Inc.
8 Technology Boulevard
Canastota, NY 13032, USA
Phone: 315-697-JUMO
1-800-554-JUMO
Fax: 315-697-5867
e-mail: info@jumo.us
Internet: www.jumo.us

Order details: Push-in RTD temperature probe with terminal head form J

(1) Basic type

902130/10	Push-in RTD temperature probes with continuous thermowell
902130/11	Push-in RTD temperature probes with stepped thermowell (with Ø 6 to 3.8mm; with Ø 8 to 6mm)
902130/31	Push-in RTD temperature probes with stepped thermowell for air measurement

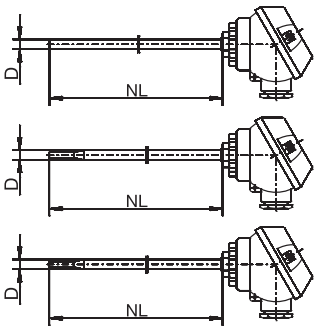

			(2)	**Operating temperature in °C**
x	x		647	-20 ... +150°C (only in conjunction with tolerance class B)
x	x	x	380	-50 ... +200°C
x	x		386	-50 ... +260°C
x	x		402	-50 ... +400°C
			(3)	**Measuring insert**
x	x		1001	1 x Pt 100 in 3-wire-circuit
x	x	x	1003	1 x Pt 100 in 2-wire circuit
x	x	x	1011	1 x Pt 100 in 4-wire circuit
x	x	x	2003	2 x Pt 100 in 2-wire circuit
			(4)	**Tolerance class according to DIN EN 60 751**
x	x	x	1	Class B (standard)
x	x	x	2	Class A
			(5)	**Protection tube diameter D in mm**
x	x	x	6	Ø 6mm
x	x		8	Ø 8mm
			(6)	**Nominal length NL in mm (50 ≤ NL ≤ 1000)**
x	x	x	50	50mm
x	x	x	100	100mm
x	x	x	150	150mm
x	x	x	250	250mm
		x	290	290mm
x	x	x	...	Specification in plain text (50mm steps)
			(7)	**Process connection**
x	x	x	000	without process connection
x			245	Thermowell screw connection, spring-loaded G 1/2, spring deflection 12mm (for Ø 8mm only, Tmax. 180°C)
x	x	x	252	Thermowell screw connection G 1/4 (for a 6mm diameter only)
x	x	x	254	Thermowell screw connection G 1/2 (for a 6mm or Ø 8mm diameter only)
x	x	x	662	Metal flange Ø 6mm
x			667	Metal flange Ø 8mm
			(8)	**Extra codes**
x	x	x	000	Without
x	x	x	330	1 x analog transmitter, 4 ... 20mA[1] output, Data sheet 70.7030

	(1)		(2)		(3)		(4)		(5)		(6)		(7)		(8)
Order code		-		-		-		-		-		-		/	
Order example	902130/10	-	402	-	1001	-	1	-	6	-	100	-	000	/	000

Stock versions

(1)		(2)		(3)		(4)		(5)		(6)		(7)		(8)	Part No.
902130/10	-	402	-	1003	-	1	-	6	-	50	-	000	/	000	90/00063618
902130/10	-	402	-	1003	-	1	-	6	-	150	-	000	/	000	90/00063620
902130/10	-	402	-	1003	-	1	-	6	-	250	-	000	/	000	90/00063622
902130/10	-	647	-	1003	-	1	-	6	-	100	-	000	/	000	90/00533469
902130/10	-	647	-	1003	-	1	-	6	-	150	-	000	/	000	90/00533470
902130/10	-	647	-	1003	-	1	-	6	-	250	-	000	/	000	90/00533471
902130/31	-	380	-	1003	-	1	-	6	-	290	-	000	/	000	90/00438399

[1] Specify measuring range in plain text.