bürkert
FLUID CONTROL SYSTEMS

Control Electronics for Solenoid Control Valves



Type 8605 can be combined with...

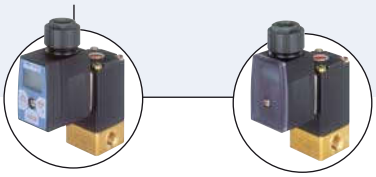

Type 8605
with operating unit combined with type 2873

Type 8605
without operating unit combined with type 2873

- Microprocessor-controlled electronics
- Selectable input signal
- Adjustable PWM frequency
- Optional RS232 or RS485 interface

The digital control electronics, type 8605, serves to operate valves in the power range from 40 - 2000 mA.
The electronics converts an external standard signal into a pulse-width modulated (PWM) signal with which the opening of the valve and hence a fluidic output parameter (e.g. flow rate) can be infinitely varied. An internal current control with the duty cycle factor of the PWM signal as control variable ensures that every value of the input signal, irrespective of the thermal condition of the coil, is unambiguously assigned a given value of the effective coil current.
Compared to DC operation of solenoid control valves the PWM operation improves, among others, their sensitivity and hysteresis.
A display and operating keys allow the electronics to be easily adapted to a particular solenoid control valve and to the concrete conditions of an application.

Technical data	
Operating voltage	12 - 24 V DC
Voltage tolerance	±10 %
Residual ripple	<5 %
Power consumption	approx. 1 W (without valve)
Output current (valve)	max. 2A
Ambient temperature	–10 to 60°C
Input signal	0-20 mA, 4-20mA or 0-5V, 0-10 V (configurable)
Input impedance	<200 Ω (with current input) >20 kΩ (with voltage input)
Output signal for valve control	PWM signal – frequency adjustable from 80Hz to 6 kHz
Ramp function	Time variable from 0 to 10 s
Version	– Cable plug for direct installation (with PG- or M12 connection) – DIN-rail version (DIN EN 50022)
Protection class	Cable plug – IP65 DIN-rail – IP40
Housing material	Cable plug – Polyamide / PC DIN-rail – Polyamide / PBT

DTS 1000086949 EN Version: H Status: RL (released | freigegeben | validé) printed: 29.08.2013

Functions of the controller Type 8605

– Microprocessor-controlled electronics
– Compensation of the solenoid coil heating by internal current control
– Configurable ramp function
– Adjustable zero point shutdown
– Display and buttons
– Selectable input signal
– RS232 or RS485 interface (with auxiliary module)
– Infinitely variable PWM frequency
– Simple adaptation of the minimum and maximum current (start of opening and full opening) to the actual pressure conditions

Ordering chart Control Electronics for Solenoid Control Valves

Version	Max. coil current [mA]	Item no.	**2861, 2871** 24 V DC	**2861, 2871** 12 V DC	**2863, 2873** 24 V DC	**2863, 2873** 12 V DC	**2865, 2875** 24 V DC	**2865, 2875** 12 V DC	**2836** 24 V DC	**6024** 24 V DC	**6024** 12 V DC	**6223** 24 V DC	**6223** 12 V DC
Cable plug with PG-connection	200 – 1000	178 354			x	x	x			x		x	
Cable plug with M12-connection	200 – 1000	178 355			x	x	x			x		x	
Cable plug with PG-connection	500 – 2000	178 356				x	x	x	x	x	x		x
Cable plug with M12-connection	500 – 2000	178 357				x	x	x	x	x	x		x
Cable plug with PG-connection without operating unit	200 – 1000	178 358			x	x	x			x		x	
Cable plug with M12-connection without operating unit	200 – 1000	178 359			x	x	x			x		x	
Cable plug with PG-connection without operating unit	500 – 2000	178 360				x	x	x	x	x	x		x
Cable plug with M12-connection without operating unit	500 – 2000	178 361				x	x	x	x	x	x		x
DIN-rail	40 – 220	178 362	x										
DIN-rail	200 – 1000	178 363	x	x	x	x	x			x		x	
DIN-rail	500 – 2000	178 364				x	x	x	x	x	x		x

Notes:
– With two current ranges possible please choose the lower one
– Successor types:
  – 2861, 2871 with 2822, 2824
  – 2863, 2873 with 2833
  – 2865, 2875 with 2835
  When using the older type please choose the control electronics indicated for the adequate new type.

Ordering chart accessories

Version	Item no.
Control unit for plug-on module	667 839
RS232 module for plug-on	667 840
RS485 module for plug-on	667 841
RS232 module for DIN-rail	667 842
RS485 module for DIN-rail	667 843
Right-angle plug M12, 4 pins	784 301
M12 connector with 5m cable, 4 pins	918 038
M8 connector with 2m cable for RS232/ Rs485 plug-on module	918 718
Cover (for control unit without display)	670 549

DTS 1000086949 EN Version: H Status: RL (released | freigegeben | validé) printed: 29.08.2013

Pin Assignment

Cable plug PG

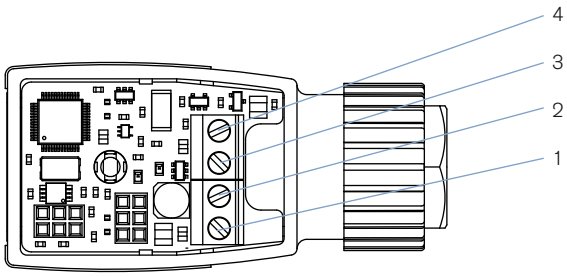

Cable plug M12

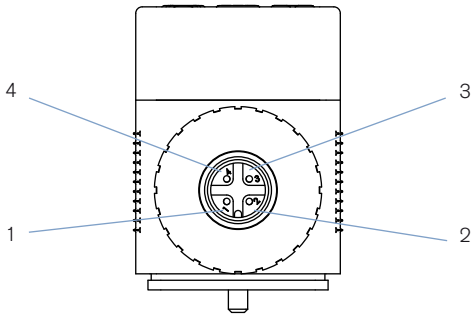

DIN-rail

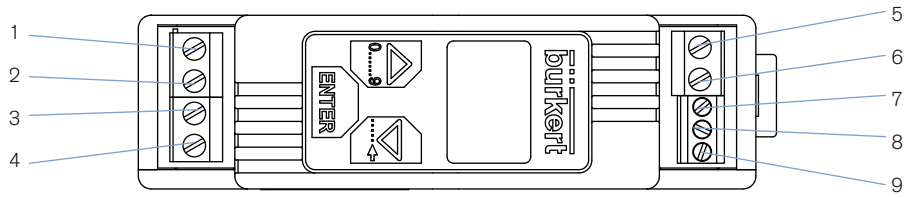

1 : + 12-24 VDC
2 : GND
3 : Standard signal GND
4 : Standard signal +
5 : Valve
6 : Valve
7 : RS232 TxD/ RS485-B *)
8 : RS232 RxD/ RS485-A *)
9 : DGND *)

*) only with RS232 or RS485 auxiliary module

DTS 1000086949 EN Version: H Status: RL (released | freigegeben | validé) printed: 29.08.2013

Dimensions [mm]

Cable plug with operating unit

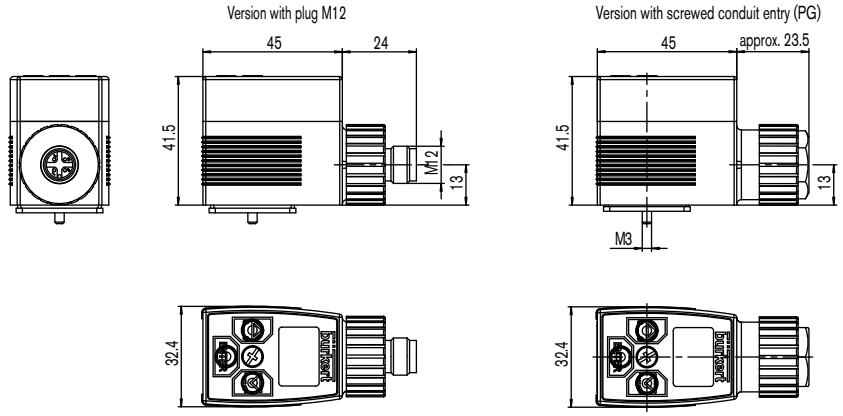

Cable plug without operating unit

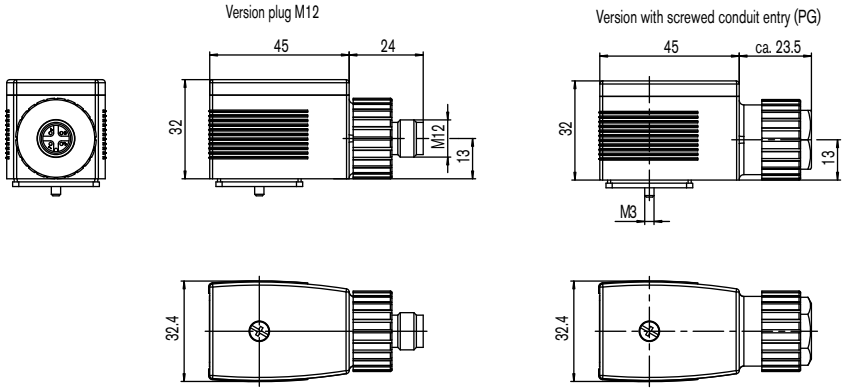

DIN-rail

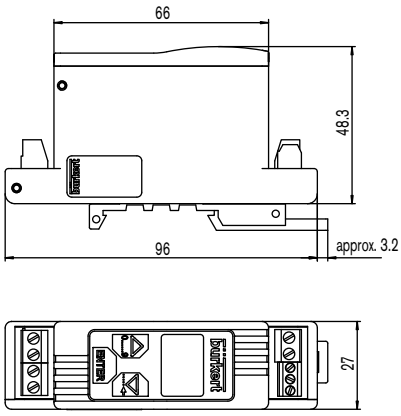

To find your nearest Bürkert facility, click on the orange box → **www.burkert.com**

In case of special application conditions, please consult for advice.

We reserve the right to make technical changes without notice.

1303/6_EU-en_00895016

DTS 1000086949 EN Version: H Status: RL (released | freigegeben | validé) printed: 29.08.2013