HS002-509 PIPE MOUNT BRACKET FOR MOMENTARY SWITCHES



- **For B Series momentary contact switches**
- **Material: Thermoplastic**
- **Max. pipe diameter 2.625” / 66.67 mm**

CPI’s line of HS Series brackets provide easy pipe and tube mounting solutions in a non-corrosive thermoplastic enclosure for our B Series Momentary Contact Waterproof Switches - (2 or 3 wire versions only - no cable).

Mount one of our B Series Momentary Waterproof Switches to a pipe or bar easily with our HS002-509 bracket. The unique “V-back” design fits pipe diameters of up to 2.625”. Two strip ties (supplied) make tightening of the bracket to your surface quick and secure. A simple snap-together feature means you can swap out switches as needed.

Due to the wire port dimension, HS brackets can be used only with individual lead switches (16AWG or 18AWG).

For mounting of our K Series On/Off Rocker Switches, please see HS001-504.

Typical Applications

- **Construction Equipment Hydraulics**
- **Liftgate Control**
- **Marine Switches**
- **Momentary Torch Switch**
- **Pendant Switch**
- **Remote Horn Signal Switch**

Dimensions

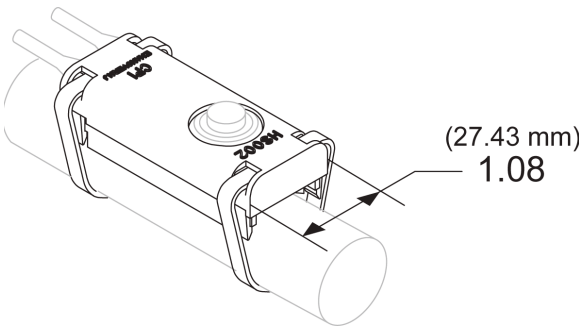

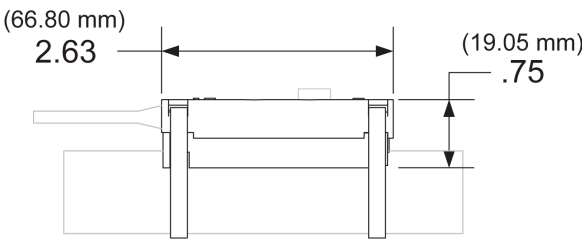

Ordering Information

HS brackets do not come pre-assembled. Please specify as item separate from your switch choice.