THE INFORMATION CONTAINED IN THIS DRAWING IS THE SOLE PROPERTY OF L-COM, INC. ANY REPRODUCTION IN PART OR WHOLE WITHOUT THE WRITTEN PERMISSION OF L-COM, INC. IS PROHIBITED.

RoHS Compliant ✔

REVISIONS			
REV	DESCRIPTION	DATE	APPROVED
A	APPROVED FOR PRODUCTION BY: S.SMITH	02/20/04	B.MAZEJKA
A	ECN 99999: ADDED ROHS STAMP AND NEW FORMAT	12/14/09	D.FRISIELLO
B	ECN 6707: ADDED SECTION A-A, .02 X 45 CHAMFER	2/27/13	D.FRISIELLO

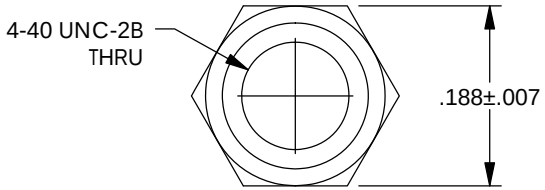

TABLE - A		
P/N	DIM - A	TOLERANCE
SDH	.232	±.007
SDHS	.195	±.007
SDH-160	.160	±.007

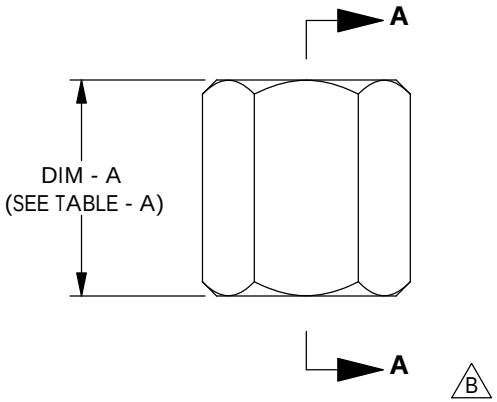

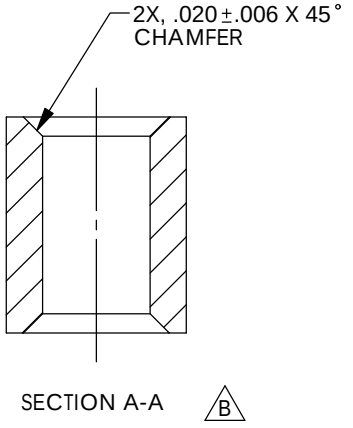

NOTES:

1. MATERIAL: BRASS
2. FINISH: NICKEL PLATED
3. SEAL 50 HEX STANDOFFS INTO AN L-COM LOGO BAG IN ACCORDANCE WITH L-COM SPECIFICATION PS-0031.

UNLESS OTHERWISE SPECIFIED,
DIMENSIONS ARE IN INCHES [mm]
DIMENSIONAL TOLERANCES:
.X = ±.1
.XX = ±.01
.XXX = ±.005
ANGULAR TOLERANCES:
ALL = ± 1°
PROJECTION

APPROVALS		DATE
DRAWN BY	B.MAZEJKA	02/17/2004
CHECKED BY	D.PARHAM	02/18/2004
APPROVED BY	R.CARRICK	02/18/2004

CONFIGURATION DETAILS OF UNDIMENSIONED FEATURES MAY VARY

COLOR VARIATIONS MAY OCCUR

L-COM Global Connectivity
45 BEECHWOOD DRIVE
NORTH ANDOVER, MA
01845

CATEGORY
HARDWARE

PRODUCT DESCRIPTION
SDH 4-40 HEX STANDOFF

SIZE	FSCM NO.	DWG. NO.	REV.
A	43321	SDH	B

SCALE: NONE | CAD FILE: SDH.SLDDRW | SHEET 1 OF 1