Dosing Pumps

Versatility

Blackstone pumps have been designed to meet the ever changing needs of industry. To accommodate diverse applications, the pumps can be easily mounted anywhere in your plant with their broad, flat base and mounting holes for tank, shelf or floor mounting (horizontal). The rear of the pump housing also provides mounting holes to facilitate vertical mounting: wall, tank or machine. With the pump valve assembly and unit controls both located on the front of the pump, there is never a problem with installation or flow adjustments.

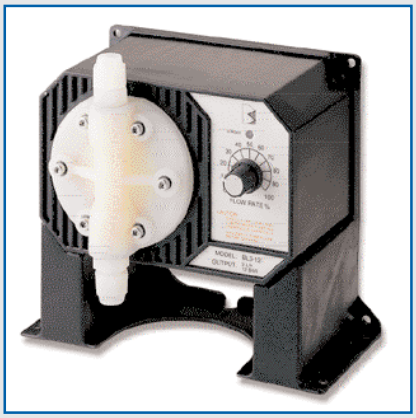

Simple Operation

Blackstone pumps are equipped with a single control for pump output. The external Flow Rate Control (potentiometer) on the face of the pump allows you to adjust the percentage of flow from 0 to 100% of the pump's rated capacity. This feature eliminates the need to worry about stroke lengths and power settings. An LED indicator lights up each time a stroke begins. This allows the user to assess the stroke rate from a distance.

High Quality Materials

Blackstone pumps have been manufactured with the highest level of mechanical precision, from materials chosen for their inherent ability to resist the effects of aggressive chemicals. When you select a Blackstone pump, you are eliminating the time consuming effort involved in picking the right material for your application. Blackstone pumps are supplied with the highest quality material as standard equipment, not optional. The diaphragm utilizes one-piece construction of Teflon®, which unlike conventional laminated diaphragms will stand up to the test of time and wear. Ball valves are constructed in glass.
The pumphead and O-rings are all made of Kynar®, Teflon® and Viton® which offer unsurpassed resistance. The chemical resistance chart on page T1.56 shows how well Kynar® and Teflon® stand up to the most aggressive chemicals.

Rugged Design

Blackstone pumps are completely sealed during assembly and offer IP65 protection (see section W for IP chart) against splashes and spills providing excellent protection even in hostile environments. The fiber-reinforced polypropylene housing stands up to aggressive chemicals while offering superior strength under tough industrial conditions.

BL Series of Dosing Pumps

Part Number	Max Output	Rated Pressure	Dosing Frequency
With Large Diaphragm	LPH	bar	strokes/min
BL 20	18.3	0.5	120
BL 15	15.2	1	120
BL 10	10.8	3	120
BL 7	7.6	3	120
With Small Diaphragm			
BL 5	5.0	7	120
BL 3	2.9	8	120
BL 1.5	1.5	13	120

HI 720032

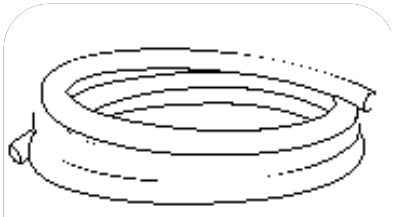

LDPE Hose

Mechanical Dimensions for the Blackstone Pumps

Accessories

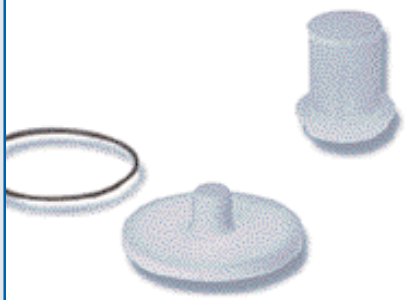

Side View

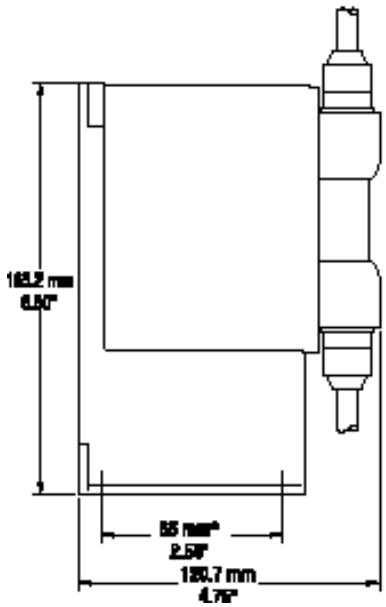

* Dimensions for floor mounting

Front View

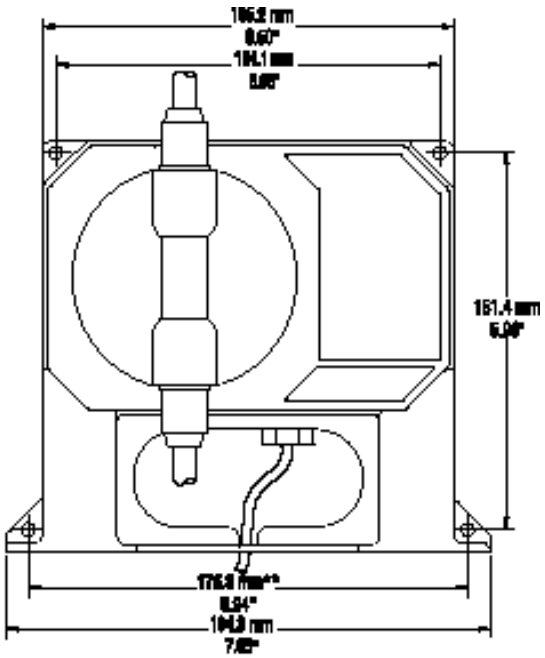

** Dimensions for floor and wall mounting

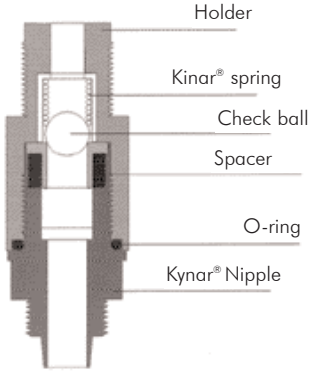

*Chemical Resistance Guide**

	PVC	PP	Hypalon	Viton®	Kynar®	Teflon®
Acetic Acid, 80%	D	B	A	E	A	A
Bleach	A	B	A	A	A	B
Citric Acid	A	A	A	A	A	A
Copper Cyanide	A	A	X	B	A	A
Copper Sulfate	A	A	B	B	A	A
Ferric Chloride	A	A	B	B	A	A
Ferric Sulfate	A	A	B	B	A	A
Hydrazine	X	X	B	B	A	A
Hydrochloric Acid (concentrated)	A	A	B	B	A	A
Hydrochloric Acid (diluted)	A	A	B	B	A	A
Hydrofluoric Acid (diluted)	D	B	D	A	A	A
Hydrogen Sulfide	C	A	B	B	A	A
Magnesium Nitrate	A	A	A	A	A	A
Magnesium Sulfate	A	A	A	A	A	A
Nitric Acid, 50%	A	C	E	A	A	A
Phosphoric Acid	B	B	A	B	A	A
Plating Baths	A	A	C	A	A	A
Potassium Cyanide	A	A	B	B	A	A
Potassium Nitrate	A	A	B	B	A	A
Propyl Alcohol	C	X	B	B	A	A
Soaps	A	A	B	B	A	A
Sodium Bicarbonate	A	A	A	A	A	A
Sodium Bisulfite	A	A	A	A	A	A
Sodium Hydroxide, 50%	A	A	B	E	A	A
Sodium Hypochlorite, 18%	A	A	A	D	A	A
Sulfuric Acid (concentrated)	A	A	B	A	A	A
Tanning Reagents	A	A	A	X	A	A
Trichloretane	E	C	E	A	A	A

Symbol Key

A - Excellent
B - Good
C - Fair
D - Acceptable (limited use)
E - Not recommended
X - Unknown

* PARTIAL LISTING



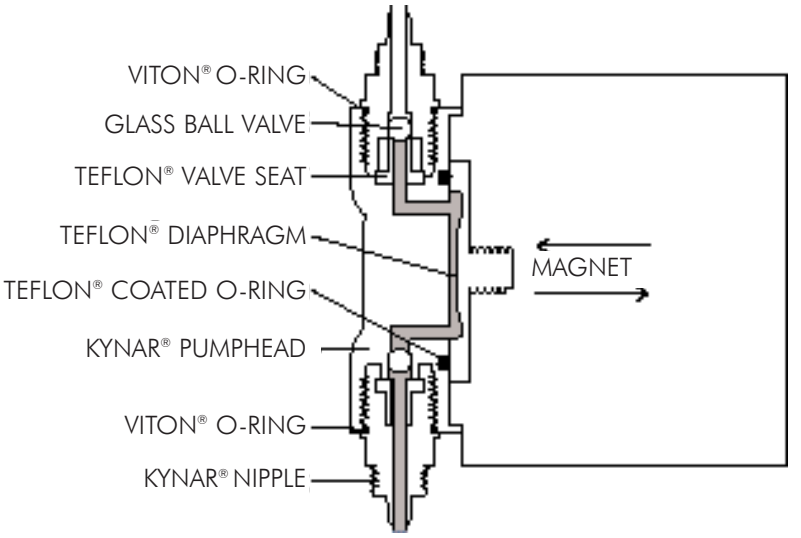



Blackstone Dosing Pumps

Blackstone's positive displacement solenoid driven pumps use a minimum number of moving parts, therefore reducing the chance of mechanical failure. Part wear and oiling associated with motor driven pumps (ball-bearings, gear drives and cams) are not present in these pumps. Blackstone pumps are more accurate than standard pumps with the positive displacement design ensuring each stroke is identical to the strokes before and after it, thus keeping the flow rate constant.

A wide range of Blackstone pumps with different dosing capacities is available for your specific dosing needs. Each pump is supplied with discharge and suction valves.

HANNA instruments® also produces polyethylene tubing, injection fittings, ceramic weights and replacement parts.



Specifications

	BL Series
Max Output	see table on page T1.54
Pump Casing	fiber-reinforced polypropylene
Materials	pumphead in Kynar®, diaphragm in Teflon®, glass ball valves and O-rings in Viton® polyethylene 5 x 8 mm tubing and 3/8" injection fitting
Self-priming	max height: 1.5 m (5 feet)
Power Supply	110/115 Vac or 220/240 Vac, 50/60Hz
Max Power Consumption	approx. 200 W
Protection	IP65 (see chart in section W)
Environment	0 to 50°C (32 to 122°F); RH max 95% non-condensing
Dimensions	165 x 194 x 121 mm (6.5 x 7.6 x 4.8")
Weight	approx. 3 kg (6.6 lb.)

Ordering Information

BL1.5-1 : 1.5 LPH flow rate, 110/115 Vac power supply
BL1.5-2 : 1.5 LPH flow rate, 220/240 Vac power supply
BL3-1 : 2.9 LPH flow rate, 110/115 Vac power supply
BL3-2 : 2.9 LPH flow rate, 220/240 Vac power supply
BL5-1 : 5.0 LPH flow rate, 110/115 Vac power supply
BL5-2 : 5.0 LPH flow rate, 220/240 Vac power supply
BL7-1 : 7.6 LPH flow rate, 110/115 Vac power supply
BL7-2 : 7.6 LPH flow rate, 220/240 Vac power supply
BL10-1 : 10.8 LPH flow rate, 110/115 Vac power supply
BL10-2 : 10.8 LPH flow rate, 220/240 Vac power supply
BL15-1 : 15.2 LPH flow rate, 110/115 Vac power supply
BL15-2 : 15.2 LPH flow rate, 220/240 Vac power supply
BL20-1 : 18.3 LPH flow rate, 110/115 Vac power supply
BL20-2 : 18.3 LPH flow rate, 220/240 Vac power supply

Accessories

HI 721101	Pumphead, O-ring and acrews	HI 721005*	Foot valve assembly
HI 721102	Discharge valve assembly	HI 721008	Ceramic weight (4 pcs.)
HI 721103	Suction valve assembly		
HI 721004*	Injection valve assembly		

* Required for operation

Blackstone Pump Replacement Parts

Assembly Diagram

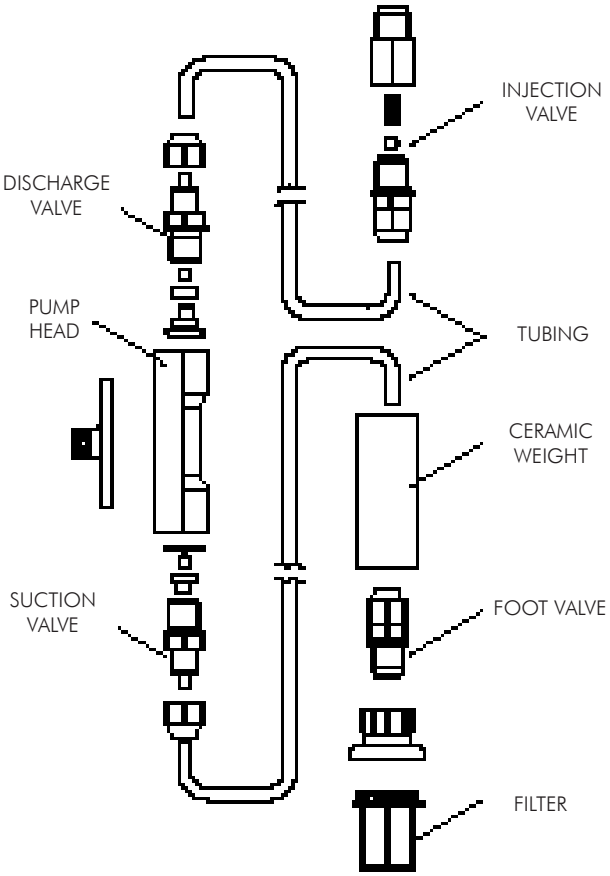

Typical Installations

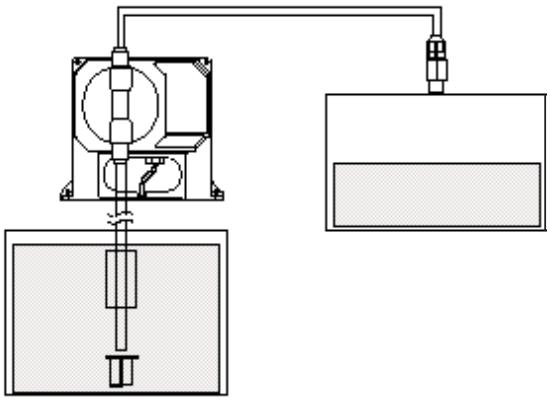

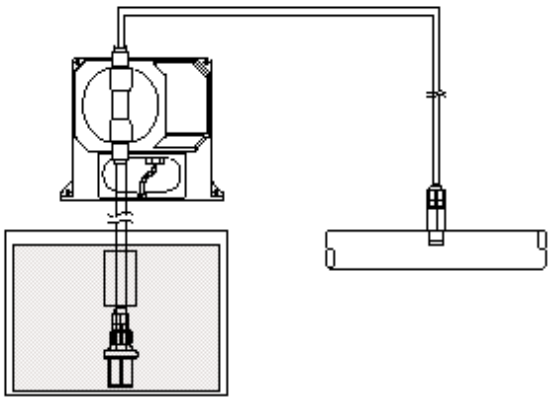

HI 721101
This kit contains the Kynar® pumphead, Teflon® coated O-ring, 6 screws and washers.

HI 721102
This kit contains all the necessary replacement parts for your discharge valve assembly. Complete with a Viton® O-ring, glass valve ball, the valve spacer and seat, head nipple and the tube nut to secure the assembled parts.

HI 721103
Suction valve assembly, complete with a Viton® O-ring, glass valve ball, the valve spacer and seat, head nipple and the tube nut to secure the assembled parts.

HI 721004
Complete with an injection nipple, Teflon® coated spring, glass valve ball and a valve assembly.

HI 721005
This kit contains a filter with a filter holder and a valve assembly.

HI 721003
This kit contains 10 glass balls and 10 valve O-rings.

HI 721006
This kit contains 4 Kynar® springs.

HI 720029
LDPE hose, 3 m (9.9').
Inside diamater 4.71 mm
Outside diameter 7.87 mm

HI 720030
LDPE hose, 10 m (33').
Inside diamater 4.71 mm
Outside diameter 7.87 mm

HI 720031
LDPE hose, 50 m (165').
Inside diamater 4.71 mm
Outside diameter 7.87 mm

HI 720032
LPDE hose, 100 m (333').
Inside diamater 4.71 mm
Outside diameter 7.87 mm

HI 721008
This kit contains 4 ceramic weights.

HI 740156
This kit contains 3 valve seats.

