PTS645 Series
6 mm Tactile Switches

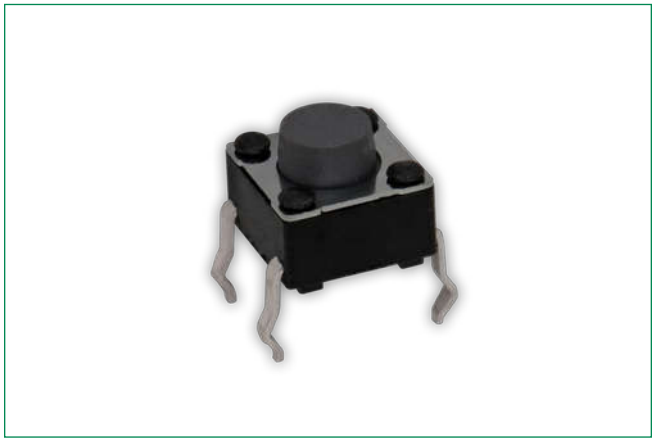

Description

The PTS645 switch series are 6mm tactile switches, designed to provide those designing for consumer product, instrumentation and computing equipment applications the long-lasting, responsive switch they need. PTS645 switches are compact (6 x 6mm) and are available in a variety of actuator lengths, with a choice of actuation force, allowing you to customize the switch to your product's needs.

Features & Benefits

- Compact size 6 x 6 mm
- Variety of actuator lengths
- Choice of actuation force
- RoHS compliant and compatible

Applications

- Consumer products
- Instrumentation
- Computer products
- Industrial

Specifications

Function	Momentary action
Contact Arrangement	SPST, N.O.
Terminals	PC pins

Mechanical Characteristics

Life Expectancy	100,000 operations

Electrical Characteristics

Contact Rating	Max. 50mA@12VDC Min. 10µA@1VDC
Dielectric Strength	250 V AC min.
Contact Resistance	100 mΩ max. initial
Insulation Resistance	10^{11} Ω min.

Environmental Characteristics

Operating Temperature	-40˚C to 85˚C
Storage Temperature	

Process

Soldering	Test 2 times Max. Reflow soldering conditions (Reference standard: J-STD-020) Preheat---150°C-200°C, 60-120 (sec) Peak temperature---260°C Max. 10 (sec) Soldering area temperature---217°C, 60-150 (sec)

Notes:
Specifications listed above are for switches with standard options. For information on specific and custom switches, consult Customer Service Center.
The PTS series is not certified for using in Automotive application and no PPAP. However, in the case of some automotive accessories and specific applications for 2 and 3 wheeled vehicles the PTS is widely used and very suitable. Please contact your local C&K representative to discuss your application and the best switch solution.

© 2024 Littelfuse, Inc.
Specifications are subject to change without notice.
Revised: CM.10/23/24

PTS645 Series
6 mm Tactile Switches

Termination (mm)
S Straight

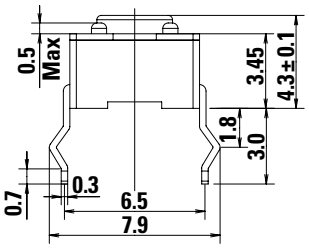

SCHEMATIC

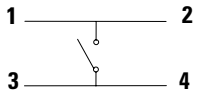

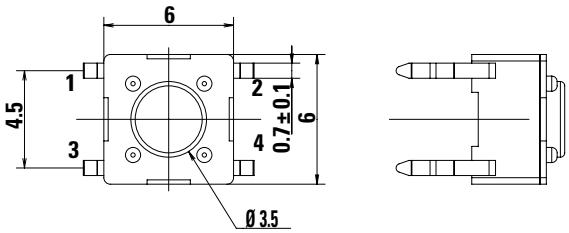

PCB LAYOUT

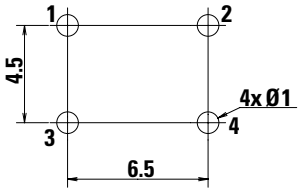

© 2024 Littelfuse, Inc.
Specifications are subject to change without notice.
Revised: CM.10/23/24

PTS645 Series
6 mm Tactile Switches

T Straight with ESD pin

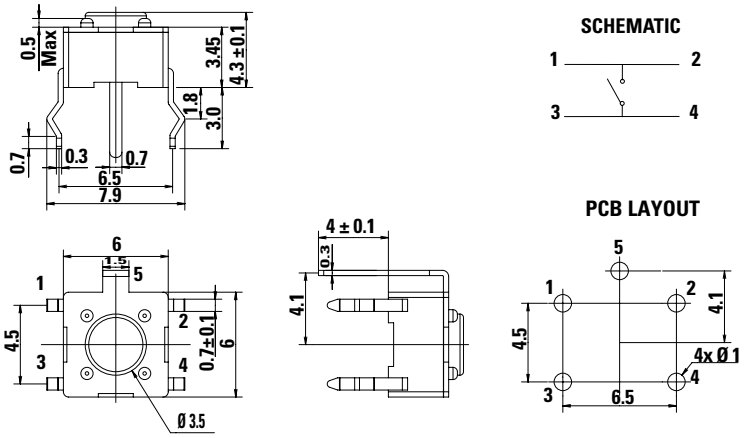

V Vertical THT

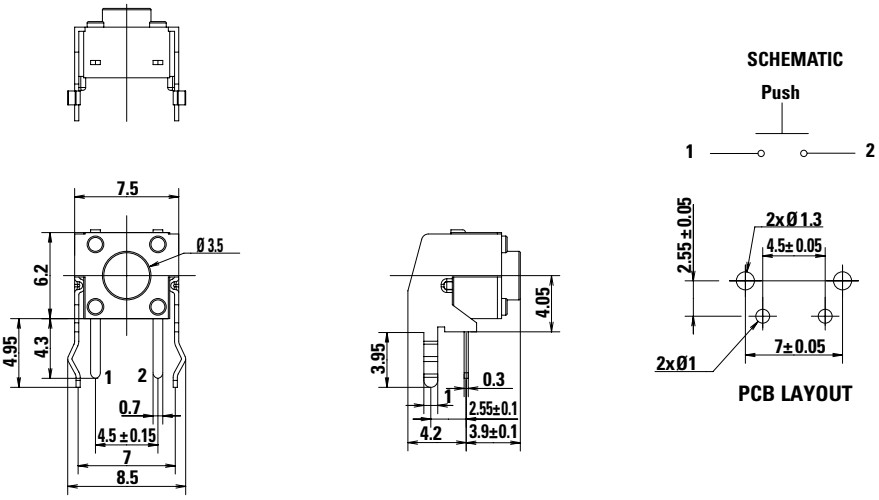

SMT G Type

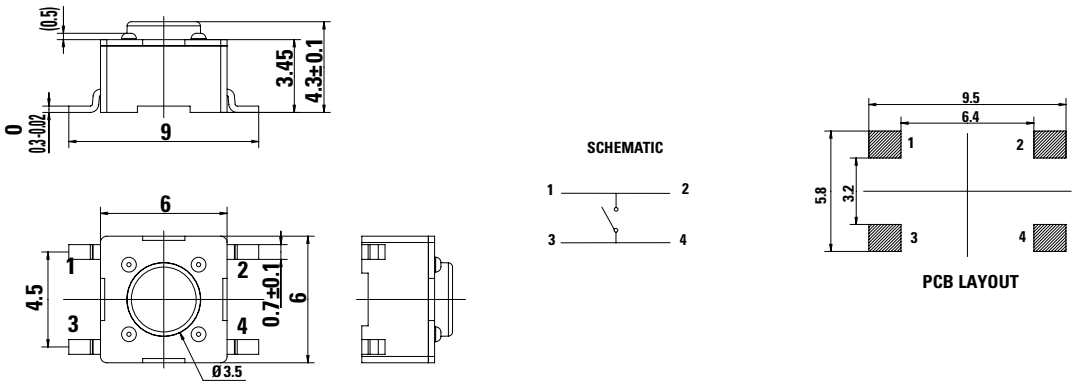

© 2024 Littelfuse, Inc.
Specifications are subject to change without notice.
Revised: CM.10/23/24

SMT J Type

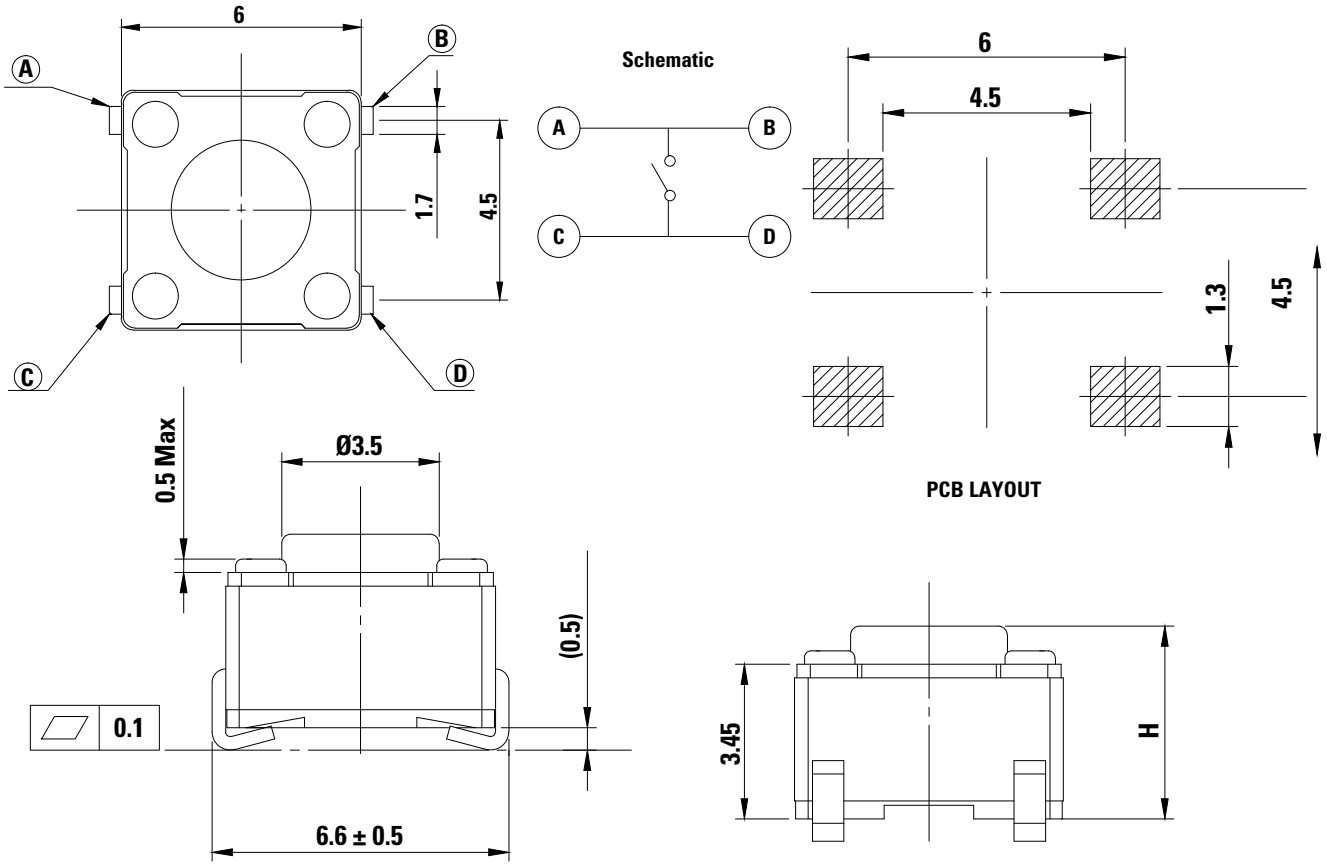

Actuator Shape
J Square Actuator
Vertical THT - for 6.15mm length only

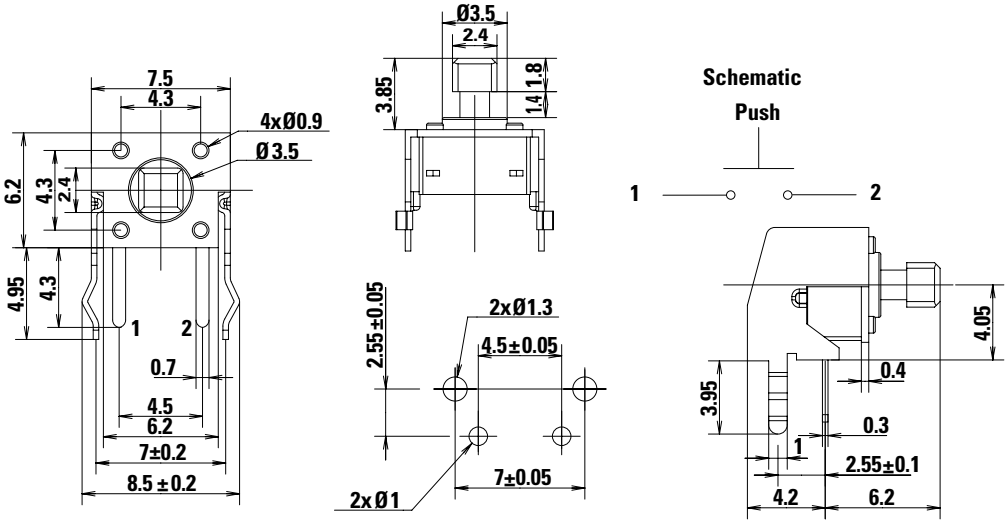

Recommended PCB Layout

© 2024 Littelfuse, Inc.
Specifications are subject to change without notice.
Revised: CM.10/23/24

PTS645 Series
6 mm Tactile Switches

Straight THT - for 7.3mm height only

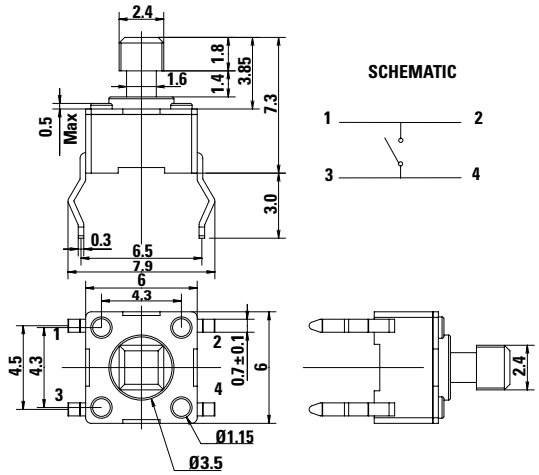

RECOMMENDED PCB LAYOUT

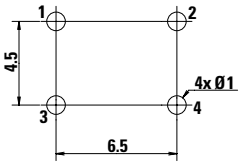

Straight SMT G Type - for 7.3mm height only

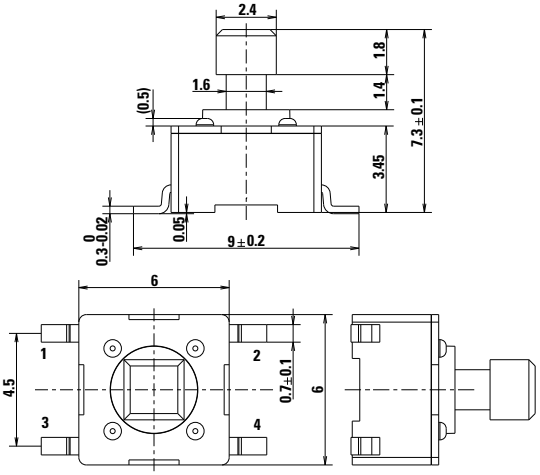

RECOMMENDED PCB LAYOUT

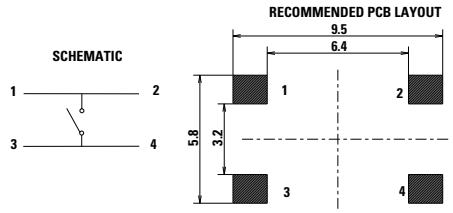

Straight SMT J Type - for 7.3mm height only

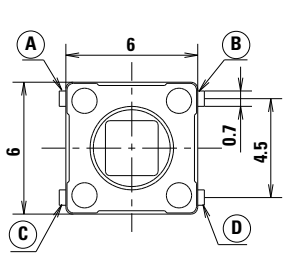

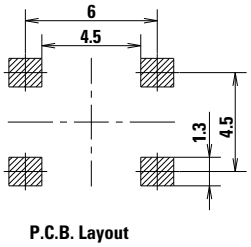

P.C.B. Layout

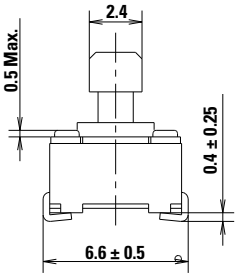

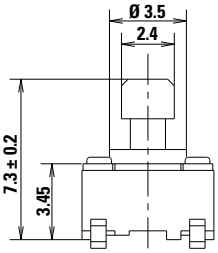

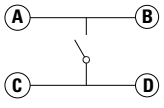

SCHEMATIC

Straight SMT - for 7.3mm height only

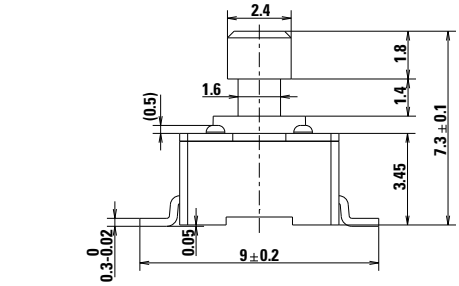

RECOMMENDED PCB LAYOUT

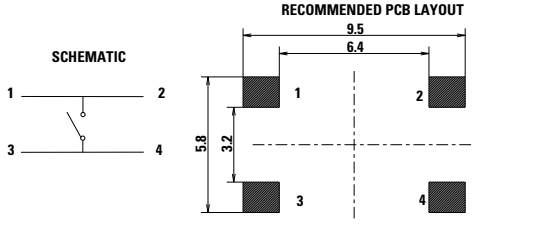

© 2024 Littelfuse, Inc.
Specifications are subject to change without notice.
Revised: CM.10/23/24

PTS645 Series
6 mm Tactile Switches

Actuator Height

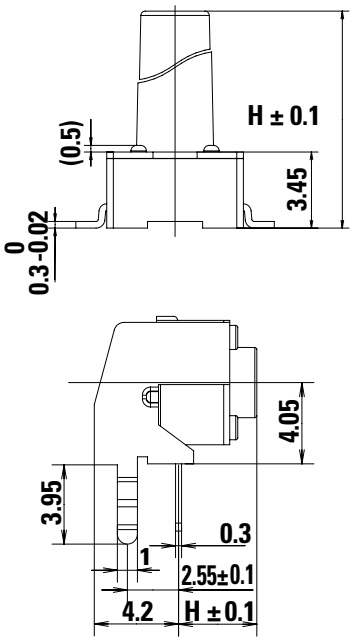

Actuation Force

Option Code	Force
L	130 grams Black
M	160 grams Blue
H	200 grams Gray
K	260 grams Red

Switch height from PCB for S and T only

Option Code	Dimension H	Termination	Schematic	
			Without EMC pin	With EMC pin
43	4.3 (0.169)	Thru-hole and SMT	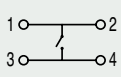	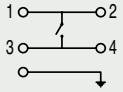
50	5.0 (0.197)			
70	7.0 (0.275)			
95	9.5 (0.374)			
13	13.0 (0.512)	SMT		

Switch length from font leads for V only

Option Code	Dimension H	Termination	Schematic	
			Without EMC pin	With EMC pin
31	3.15 (0.124)	Vertical		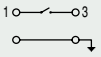
39	3.85 (0.151)			
58	5.85 (0.230)			
83	8.35 (0.329)			

Tape Dimension

Option Code	Width Tape	Pocket Height
43	16 ± 0.3	5.3
50		
70		7.3
73		7.6
95	24 ± 0.3	10.3
13		13.3

Tape & Reel for SMT G type Versions

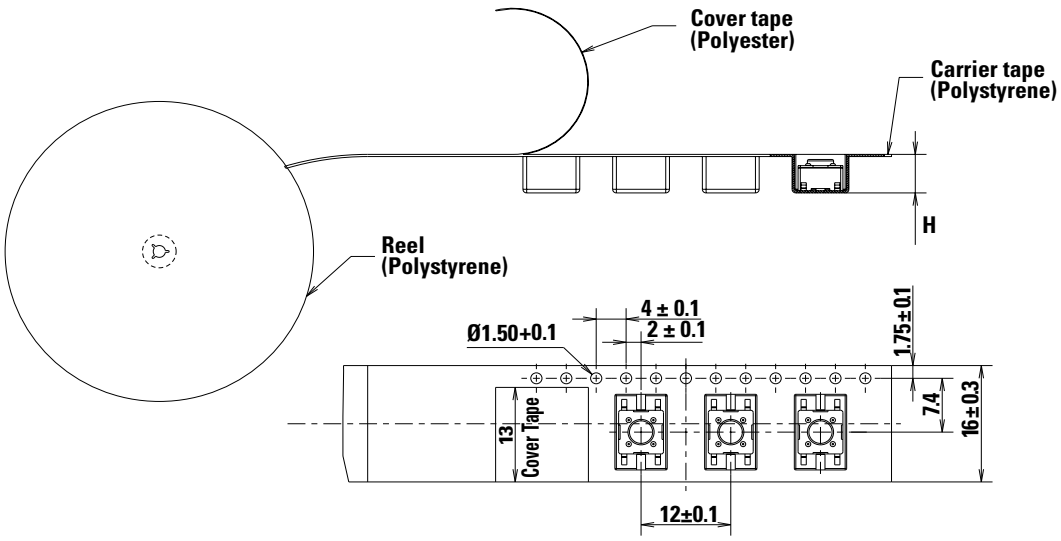

© 2024 Littelfuse, Inc.
Specifications are subject to change without notice.
Revised: CM.10/23/24

PTS645 Series
6 mm Tactile Switches

Packaging

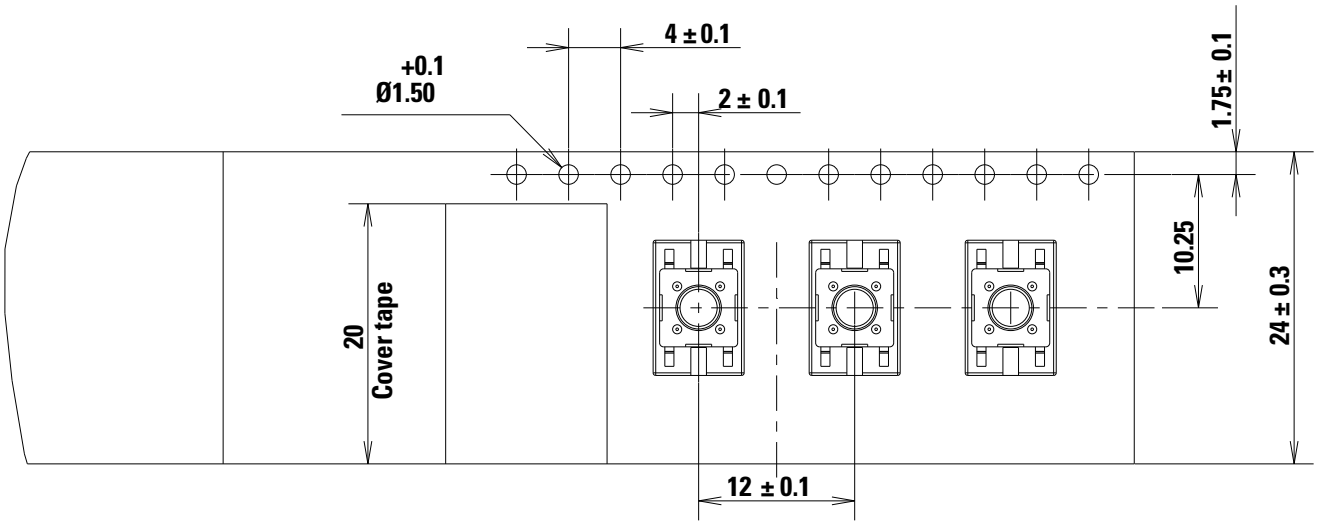

Note:
Bulk Packaging
Tape & reel for the SMT type:
Reels of 1,000 pieces for 4.3 and 5.0 mm height.
Reels of 700 pieces for 7.0 mm height.
Reels of 700 pieces for 7.3 mm height.
Reels of 500 pieces for 9.5 mm height.
Reels of 400 pieces for 13.0 mm height.

Tape & Reel for SMT J type Versions

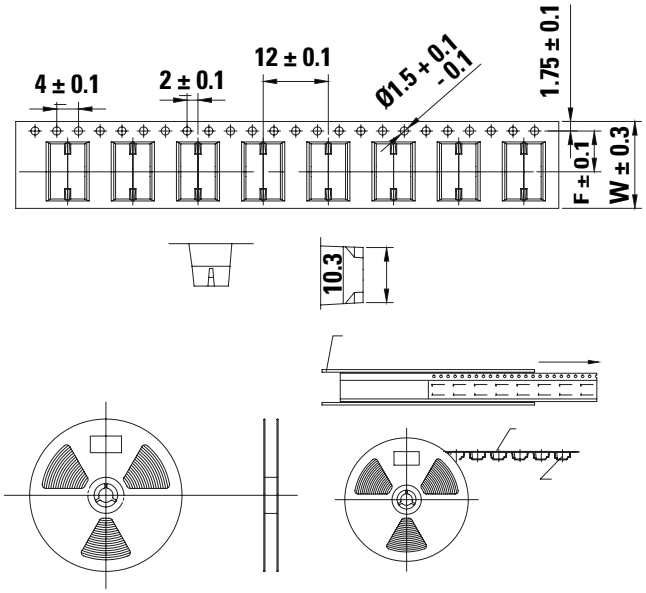

Tape Specifications

Product Height	Carrier Width Tape (W) mm	Center Distance of Carrier Tape (F) mm	pcs/reel
4.3	16	7.5	1000
5.0			
7.0			700
7.3			
9.5	24	11.5	500
11			
13			

Note:
The disc rotates counterclockwise. According to the packing shown in the figure, the braid must not be twisted to prevent product deformation.

© 2024 Littelfuse, Inc.
Specifications are subject to change without notice.
Revised: CM.10/23/24

PTS645 Series
6 mm Tactile Switches

Ordering Number

Our easy build-a-switch concept allows you to mix and match options to create the switch you need. To order, select desired option from each category and and place it in the appropriate box.

PTS645 - x - x - x - xx - xxxxxxx - LFS

Termination
S: Straight
T: Straight with ESD pin
V: Vertical THT

Actuator Shape
None: Round actuator, All versions
J: Square actuator, 2.4 mm side (available for Straight 7.3 mm and Vertical 6.15 mm)

Acutation Force
N: 100 gf
L: 130 gf
M: 160 gf
H: 200 gf
K: 260 gf
P: 320 gf
R: 360 gf

Switch height from PCB for S and T only
(H dimension see actuator height drawings)
43: 4.3 (.169), thru-hole and SMT
50: 5.0 (.197), thru-hole and SMT
70: 7.0 (.275), thru-hole and SMT
73: 7.3 (.287), thru-hole and SMT, square actuator 2.4 mm side only
95: 9.5 (.374), thru-hole and SMT
13: 13.0 (.512) SMT only
11: 11.0 (.433) SMT only

Switch length from front leads for V only
(H dimension see actuator height drawings)
31: 3.15 (.124), vertical
39: 3.85 (.151), vertical
58: 5.85 (.230), vertical
61: 6.15 (.242), vertical, square actuator 2.4 mm side only
83: 8.35 (.329), vertical

Insertion Type
2: Thru hole
SMTR92[1]: Surface mount G-type, tape & reel
JSMTR92[1]: Surface mount J-type, tape & reel

RoHS compliant and compatible, Silver plated

Notes:
1. Only the straight type termination without ESD pin is available in SMT type
Long life version has to be created case by case as special part number

Liability Limitation

This datasheet does not provide enough information for applications that require a certain level of quality or safety such as automotive, medical systems, or safety equipement. Please contact customer service for the contractual specification package.

Disclaimer Notice - Information furnished is believed to be accurate and reliable. However, users should independently evaluate the suitability of and test each product selected for their own applications. Littelfuse products are not designed for, and may not be used in, all applications. Read complete Disclaimer Notice at http://www.littelfuse.com/disclaimer-electronics.

© 2024 Littelfuse, Inc.
Specifications are subject to change without notice.
Revised: CM.10/23/24