E43902

Lock nut for mounting adapter

LOCK NUT G3/4",POM

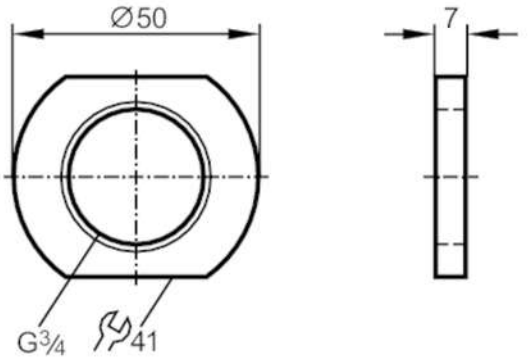

Application		
Design		for mounting adapters
Operating conditions		
Ambient temperature	[°C]	-25...80
Mechanical data		
Weight	[g]	13.4
Dimensions	[mm]	G ¾
Thread designation		G ¾
External diameter	[mm]	50
Materials		POM
Remarks		
Pack quantity		1 pcs.