Datasheet - ZQ 700-02

Pull-wire emergency stop switches / ZQ 700

☒ Preferred typ



(Minor differences between the printed image and the original product may exist!)

- thermoplastic enclosure
- one-side operation / wire up to 10 m long
- Release push button
- Position indicator
- Large wiring compartment
- Twisting of towing eye not possible
- wire pull and breakage detection
- One tension force for cable lengths up to 10 m
- 1 Cable entry M 20 x 1.5

Ordering details

Product type description	ZQ 700-02
Article number	1192478
EAN code	4030661352671

Approval

Approval	TÜV USA/CAN CCC

Classification

Standards	EN ISO 13849-1
B_{10d} Opener (NC)	100.000
Mission time	20 Years
notice	

$$MTTF_d = \frac{B_{10d}}{0,1 \times n_{op}}$$

$$n_{op} = \frac{d_{op} \times h_{op} \times 3600\ s/h}{t_{cycle}}$$

Global Properties

Product name	ZQ 700
Standards	EN 60947-5-1, IEC/EN 60947-5-5, EN ISO 13850
Compliance with the Directives (Y/N) CE	Yes
Materials	
- Material of the housings	Plastic, thermoplastic
- Material of the cover	Plastic, thermoplastic
- Material of the contacts	Silver
Weight	216 g
Emergency-Stop button (Y/N)	No

Mechanical data

Design of electrical connection	Screw connection
Cable section	
- Min. Cable section	0,75 mm²
- Max. Cable section	2.5 mm²
Mechanical life	> 1.000.000 operations
Length of wire	max. 10 m
notice	All indications about the cable section are including the conductor ferrules.

Ambient conditions

Ambient temperature	
- Min. environmental temperature	−25 °C
- Max. environmental temperature	+70 °C
Protection class	IP67 to IEC/EN 60529

Electrical data

Design of control element	Opener (NC)
Switching principle	Snap switch element
Number of auxiliary contacts	0 piece
Number of safety contacts	2 piece
Rated impulse withstand voltage U_{imp}	6 kV
Rated insulation voltage U_i	500 V
Thermal test current I_{the}	10 A
Utilisation category	AC-15: 230 V / 4 A, DC-13: 24 V / 4 A
Max. fuse rating	6 A gG D-fuse

Dimensions

Dimensions	
- Width	40.5 mm
- Height	160 mm
- Depth	50.9 mm

notice

At 2 bis 5 m distance intermediate wire supports are required, see accessories

Recommended cable lengths for pull-wire Emergency-Stop switches in relation to the range of ambient temperature.

As the thimbles are subject to deformation in case of wire pull, the wire should be pulled several times after fitting. After that, the wire must be re-tensioned using the eyebolt or the tensioner.

Indication legend

1 = Wire rope
2 = Eyebolt
nut 3 =
4 = Wire clamp
5 = Tensioning jack
Wire thimble 6 =
shackle 7 =
8 = rope tensioner
A = Position indicator
B = reset button

Diagram

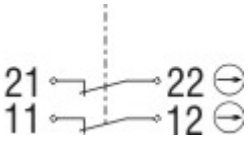

Note Diagram

positive break NC contact

active

no active

Normally-open contact

Normally-closed contact

Ordering code

ZQ 700-**(1)**

(1)

11 1 Normally open contact (NO) / 1 Opener (NC)

02 2 Opener (NC)

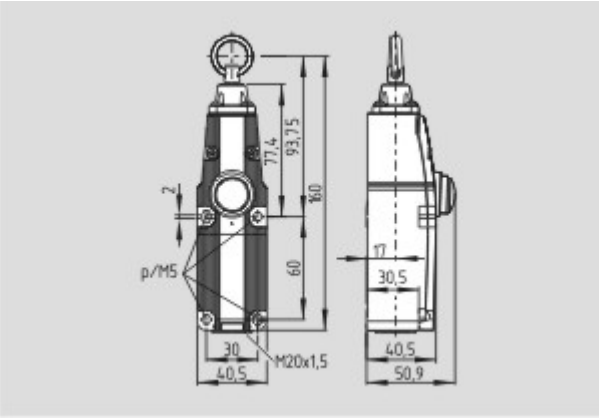

Dimensional drawing (basic component)

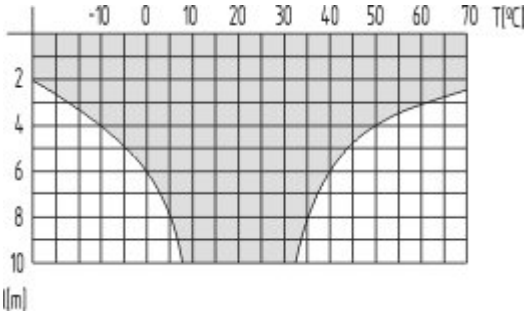

Characteristic curve

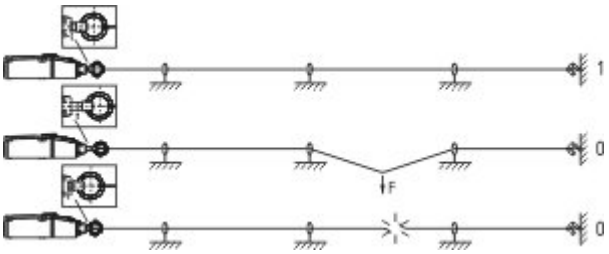

Application

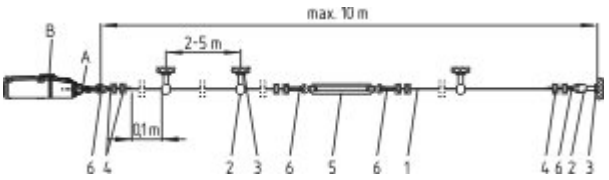

Application

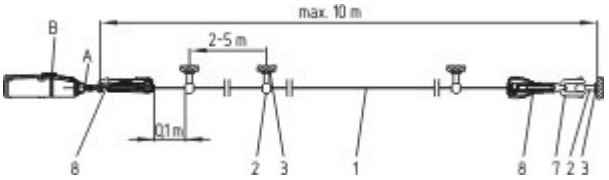

Application

System components

Accessories

1162986 - Eyebolt BM 8 x 70



1192471 - Eyebolt BM 8 x 70 NIRO





1084928 - Eyebolt BM 10 x 40



1203477 - Wire clamp 3 mm NIRO



1203569 - Wire clamp 4 mm NIRO



1203478 - Wire clamp 5 mm NIRO



1190917 - Duplex wire clamp 3 mm NIRO

• for Wire rope Ø 3 mm



1203569 - Duplex wire clamp 4 mm NIRO

• for Wire rope Ø 3 mm



1196043 - Egg-shaped wire clamp GR 3

• for Wire rope Ø 3 mm

1077072 - Egg-shaped wire clamp GR 4



• for Wire rope Ø 4 mm



1203472 - WIRE THIMBLE 3 mm NIRO

• for Wire rope Ø 3 mm
• to DIN 6899



1170750 - WIRE THIMBLE 4 mm

• for Wire rope Ø 4 mm
• to DIN 6899



1203475 - WIRE THIMBLE 4 mm NIRO

• for Wire rope Ø 4 mm
• to DIN 6899



1203476 - WIRE THIMBLE 5 mm NIRO

• for Wire rope Ø 5 mm
• to DIN 6899



1192433 - PULLEY

• for Wire rope Ø 3 mm
• To guide the wire rope where the path is not a straight line

---



1087930 - TENSIONING JACK M6

• For exact adjustment of the tension of the wire rope
• to DIN 1480

1186696 - TENSION SPRING RZ-2041

• To maintain the reaction force





1087931 - TENSION SPRING RZ-136E

• To maintain the reaction force



1170752 - TENSION SPRING RZ-156I

• To maintain the reaction force



1186490 - SHACKLE NIRO

• Shackle for fixing the wire rope to the eyebolt



1122315 - TENSION SPRING RZ-172

• To maintain the reaction force



1094517 - WIRE ROPE 5 mm

• With red PVC sheath
• Ø 5 mm total
• Steel core Ø 3 mm



1147304 - WIRE UNIT COMPLETE 5 m

• Ready-to-fit
• With red PVC sheath

1155097 - WIRE UNIT COMPLETE 10 m

• Ready-to-fit



• With red PVC sheath



1186704 - rope tensioner S 900

• Smooth adjustment
• Only one tool
• Antiskid
• Time-saving
• Ergonomic
• No risk of injury

K.A. Schmersal GmbH, Möddinghofe 30, D-42279 Wuppertal
The data and values have been checked throroughly. Technical modifications and errors excepted.
Generiert am 28.09.2011 - 15:16:27h Kasbase 1.5.5 DBI