Safety manual
MTL Surge protection

November 2016
SM Surge Rev 2

CROUSE-HINDS SERIES

Instruments signal connections
Surge Protection Devices

SIL 1 IEC 61508:2010 SIL 2 IEC 61508:2010 SIL 3 IEC 61508:2010

SD range, SD07/16/32/55 all versions and SDRTD, SD150X, SD275X. SLP07D, SLP16D, SLP32D. IOP range, all versions. TP range, TP24/7, TP-32, TP-48.



FSM FUNCTIONAL SAFETY MANAGEMENT IEC 61508:2010

FUNCTIONAL SAFETY MANAGEMENT

These products are able to be used within a Safety System conforming to the requirements of IEC 61508:2010 or IEC 61511. The products are not Safety Elements but may be used to protect instrument loops designed to achieve Safety Integrity Level of up to SIL3.

Eaton is a certified Functional Safety Management company meeting the requirements of IEC61508 Part1:clause 6

EATON
Powering Business Worldwide

Surge Protection Devices



Contents

1	**Introduction**		3
	1.1	Application and function	3
	1.2	Variant description	3
2	**System configuration**		4
	2.1.1	Input/output characteristics	5
	2.1.2	Associated system components	5
3	**Selection of product and implications**		6
4	**Assessment for use in Functional Safety applications**		6
	4.1	EMC	8
	4.2	Environmental	8
5	**Installation**		8
7	**Maintenance**		8
8	**Appendices**		9

This manual supports the application of the products in functional safety related loops. It must be used in conjunction with other supporting documents to achieve correct installation, commissioning and operation. Specifically, the data sheet, instruction manual and applicable certificates for the particular product should be consulted, all of which are available on the Eaton web site.

In the interest of further technical developments, Eaton reserve the right to make design changes.

1 Introduction

1.1 Application and function

The products concerned in this manual are 'Surge Protection' devices which can be located in safe or hazardous areas of a process plant to guard against the direct and indirect effects of lightning, or other transient overvoltage, on the instrumentation and power signals. They are also designed and tested according to IEC 61643-21 (Low voltage surge protective devices) for use in signal and communication loops.

The location, or mounting, of the surge protection device is a key parameter when considering the operation of the device and the consequences of breakdown or failure upon the operation of the signal loop to which it is connected.

The TP family of products are designed to protect field-mounted equipment, such as process measurement transmitters for level, flow, pressure, etc, by fixing directly into the cabling conduit entries of the housing. The SD, SLP and IOP range are mounted on DIN rail in a cabinet or enclosure to protect the measuring and control equipment that is usually located in a control or equipment room.

Each module provides a hybrid surge protection circuit for one or two instrument loops. The devices are passive and consume no loop current in normal operation.

There are no configuration switches or operator controls to be set on the modules – they perform a fixed function, related to the model selected, and can be considered as wiring components that pass the process signals without alteration.

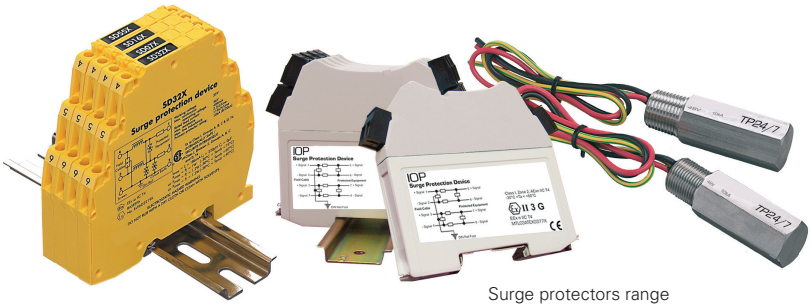

Surge protectors range

Note: The information given in this manual is intended to assist in the selection and application of surge protection devices for instrumentation signals that are being used to provide functional safety according to the latest IEC 61508 and IEC 61511 standards.

Within the context of these standards the surge protection devices themselves do not perform a defined safety function and thus a full assessment for functional safety to IEC 61508 would not be relevant. The products are regarded as wiring components, providing connection and termination for the electrical signals, with the key concern being the reliability of the signal transfer through the device.

See Appendix B where this position is affirmed by a notified certification body.

1.2 Variant Description

Functionally the surge protection devices are essentially the same, within a given range, but the modules differ in the maximum signal voltage they will conduct in normal operation.

The TP items become an integral part of the field transmitter and the SD/SLP/IOP models are selected to suit the specific requirements for protection of one or more process loops.

Typical internal construction of the devices is shown in the following diagrams:

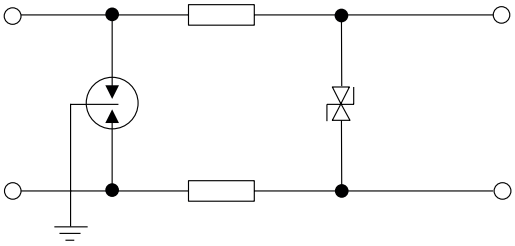

Figure 1 IOP range surge protection arrangement (single channel)

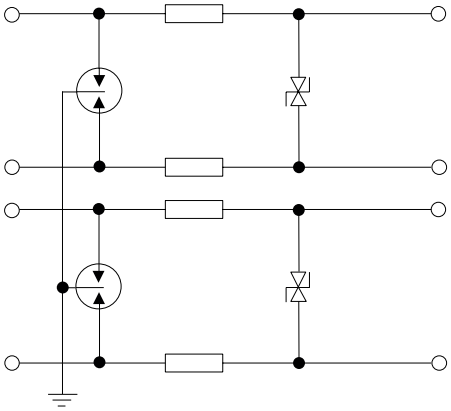

Figure 2 IOP range surge protection arrangement, (dual channel)

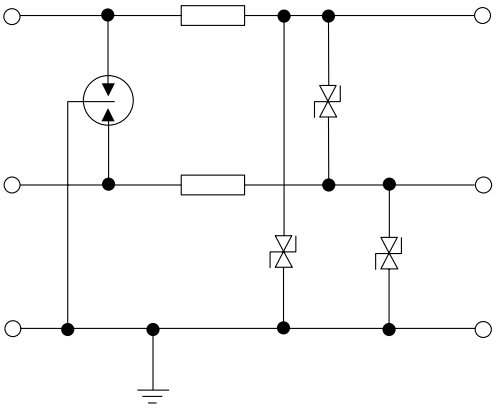

Figure 3 SD range surge protection arrangement (typical)

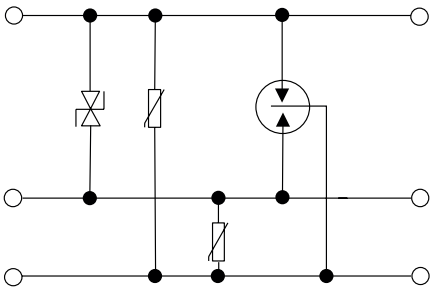

Figure 4 TP range surge protection arrangement (Parallel)

The surge protection devices covered by this manual are:			
SD range SD07, SD16, SD32, SD55 SD**R, SD**X, SD**R3, SD**T3, SD**X3 SD32-L, SD32-BL, SDRTD SD150X, SD275X	**SLP range** SLP07D, SLP16D, SLP32D	**IOP range** IOP32, IOP32D, IOP HC32	**TP range** TP24/7, TP32, TP48**

System Configuration

The surge protection devices may be used as protective wiring components in functional safety applications but the devices are not considered as 'safety elements' conforming to the requirements of IEC 61508. As stated previously, the protection devices limit the energy seen by instrument systems as a consequence of external electrical events such as induced surges, voltage transients, etc arising from lightning strikes or high voltage switching for example. Users of these surge protection devices can utilize the failure rate information contained in this manual in a probabilistic model of a Safety Instrumented Function (SIF) to determine suitability of the safety instrumented system to achieve the required Safety Integrity Level (SIL).

The figure below shows an example system configuration and specifies detailed interfaces to the safety related system components. It does not aim to show all details of the internal module structure, but is intended to support understanding for the application.

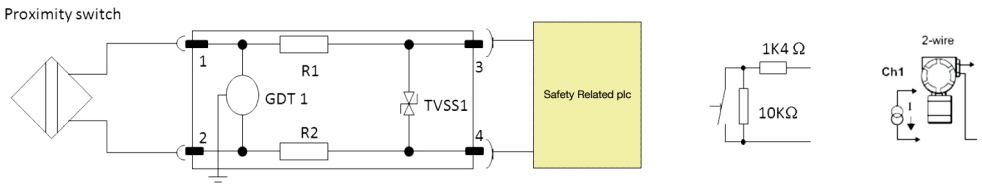

The SD/SLP/IOP modules are designed to protect the input into the safety plc from damaging transients and surge. The yellow (hatched) area shows the safety relevant system connection.

Consideration must be given to the use of dual channel devices when considering the integrity of the installation. A failure in one channel of a two channel device will require replacement of the complete module and the downtime of the two loops connected.

Otherwise, functionally the single channel and dual channel units are the same.

2.1.1 Input/Output Characteristics

The SD/SLP/IOP/TP surge protectors are passive devices and do not modify or alter the signal in normal operation, but simply limit electrical energy.

2.1.2 Associated System Components

The surge protectors are wiring components in the signal path between safety-related sensors or other field devices and safety-related instruments or control systems.

3 Selection of product and implications

The choice of surge protection component is made according to the location, signal type, signal level and operational or maintenance considerations for the safety instrumented function rather than any safety aspect of the surge components themselves.

See the previous comments regarding the nature of surge protection in relation to functional safety applications.

The information given in section 4 provides the hardware failure rates for the surge protection devices according to the expected consequence of the failures upon the signal passing through the device. The user can thus assess the effect of such failures upon the safety instrumented function.

4 Assessment for use in functional safety applications

On their own, surge protection devices do not perform a safety function and are considered as wiring components within the contexts of IEC 61508 and its associated standards. As such, the evaluation for use within a safety function, to a specific SIL level of such products, is not possible. However, when used as part of a complete safety system, the product can be assessed with regard to failure modes and effects on the overall system.

The hardware assessment shows that the surge protection devices:

- have a hardware fault tolerance of 0
- are classified as Type A devices ("Non-complex" component with well-defined failure modes)
- have no internal diagnostic elements

The results of a Failure Mode and Effect Analysis to determine the hardware failure rate of the modules were determined as follows:-

TP Parallel surge suppression devices

Failure mode	Failure rate (FIT)			
	TP24/7	TP32	TP48 2W+G	TP48 3/4W+G
Detectable fault on signal*	11.4	12.1	7.6	15.1
Signal affected	6.4	5.4	3.5	7.0
Correct operation (failures have no effect)	42.9	22.9	20.1	40.2

* signal is driven outside normal operating range of 4/20mA and is detectable by the logic solver.

SD range surge suppression devices

Failure mode	Failure rate (FIT)				
	SD07/16/ 32/55	SDyyR/X (i)	SD07z3 (ii)	SD16/32/ 55z3 (ii)	SDRTD
Connected signal not affected	23.9	14.9	22.0	22.0	21.1
Connected signal interrupted	14.5	14.5	20.1	17.8	20.1
Errors in connected signal	1.5	1.5	6.9	5.9	9.0
Correct operation (failures have no effect)	51.4	32.4	51.3	49.9	50.1

(i) SDyy used to represent SD07, SD16, SD32 and SD55

(ii) z3 used to represent R3, T3 and X3

SLP range surge suppression devices

Failure mode	Failure rate (FIT)		
	SLP07D	SLP16D	SLP32D
Connected signal not affected	70	70	70
Connected signal interrupted	76	76	76
Errors in connected signal	2	2	2
Correct operation (failures have no effect)	23	23	23

IOP range surge suppression devices

Failure mode	Failure rate (FIT)		
	IOP32	IOP32D	IOP HC32
Connected signal not affected	5.4	5.4	5.4
Connected signal interrupted	65	65	65
Errors in connected signal	0	0	0
Correct operation (failures have no effect)	4.6	4.6	4.6

- FITs means failures per 10^9 hours or failures per thousand million hours.
- Reliability data for this analysis is taken either from the Electrical and Mechanical Component Reliability Handbook, 2006, by Exida L.L.C., or from IEC TR 62380:2004.

It is assumed that the device is installed, operated and maintained according to the product specification. The product has been assumed to operate at an average ambient temperature of 40°C under normal conditions. For a higher average temperature of 60°C, or if subject to frequent temperature fluctuation, the failure rates should be multiplied with an experience based factor of 2.5.

The information given here is to help the designer of a Safety Instrumented Function assess the impact of including surge protection devices on the operation and availability of the instrument loops.

The surge devices themselves are not 'safety elements'.

4.1 EMC

The surge protection devices are designed for operation in normal industrial electromagnetic environment but, to support good practice, modules should be mounted without being subjected to undue conducted or radiated interference, see Appendix A for applicable standards and levels.

Any maintenance or other testing activity should only be conducted when the field loop is not in service, to avoid any possibility of introducing a transient change in the field signal.

4.2 Environmental

The surge protection devices operate over the temperature range from-40°C to +70°C, and at up to 95% non-condensing relative humidity.

The devices are intended to be mounted in a normal industrial environment without excessive vibration, as specified for the specific product ranges. See Appendix A for applicable standards and levels.

Continued reliable operation will be assured if the exposure to temperature and vibration are within the values given in the specification.

5 Installation

There are two particular aspects of safety that must be considered when installing the surge protection devices and these are:

- Functional safety (applicable when used in SIFs)
- Intrinsic safety (only applicable when used in intrinsic safety loops)

When required, reference must be made to the relevant sections within the instruction sheet or manual for the product range which contain basic guides for the installation of the interface equipment to meet the requirements of intrinsic safety. In many countries there are specific codes of practice, together with industry guidelines, which must also be adhered to.

Provided that these installation requirements are followed then there are no additional factors to meet the needs of applying the products for functional safety use.

With the exception of the TP models which are designed for field mounting, to guard against the effects of dust and water the modules should be mounted in an enclosure providing at least IP54 ingress protection rating, or the location of mounting should provide equivalent protection such as inside an equipment cabinet.

6 Maintenance

To follow the guidelines pertaining to operation and maintenance of intrinsically safe equipment in a hazardous area, periodic audits of the installation are required by the various codes of practice.

In addition, proof-testing of the instrumented loop operation to conform with functional safety requirements should be carried out at the intervals determined by safety case assessment.

The continuity of the surge device will be tested (not surge function) when the overall loop function is tested both during commissioning and through the life of the intended safety function. The removal of the Surge protective device during these tests is not required.

If an MTL surge protection device is found to be faulty during commissioning or during the normal lifetime of the product then such failures should be reported to the local MTL office. When appropriate, a Customer Incident Report (CIR) will be notified to enable the return of the unit to the factory for analysis. If the unit is within the warranty period then a replacement unit will be sent.

Consideration should be made of the normal lifetime for a device of this type which would be in the region of twenty years, with a typical warranty period of ten years.

7 Appendices

Appendix A: Summary of applicable standards

The annex lists together all standards referred to in the previous sections of this document:

IEC 61508:2010	Functional safety of electrical/electronic/programmable electronic safety-related systems. Parts 1 and 2 as relevant.
IEC 60654-1:1993	Industrial-process measurement and control equipment. Operating conditions. Climatic conditions
IEC 61643-21:2000+A1:2008	Low voltage surge protective devices- Part 21: Surge protective devices connected to telecommunications and signalling networks- Performance requirements and testing methods.

Appendix B: Functional Safety and Surge Protection Devices

TÜVRheinland®
Precisely Right.

Industrial Services
Functional Safety

Joseph A. Lenner
Email: jllenner@us.tuv.com

October 5, 2012

Mr. Curtis Domsch
MTL Surge Technologies
4325 Woodland Park Drive, Suite 101
W. Melbourne, FL 32904, USA

Subject: **Functional Safety note to MTL surge protection devices**

To whom it may concern:

The purpose of this letter is to convey to MTL Surge Technologies that TUV Rheinland assumes that the surge protection devices designed and manufactured by MTL Surge Technologies are not reasonable to undergo a complete functional safety assessment as described per IEC 61508.

The reason for this is that one of the main criteria to perform a functional safety assessment per IEC 61508 for a safety device/component is that it must have a defined safety function. The MTL surge protective devices have not a defined safety function in reference to IEC 61508. If the devices become part of a safety loop the influence to the performance of the safety function has to be evaluated.

Best regards,

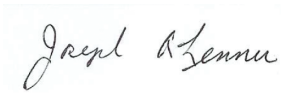

Joseph A. Lenner
Senior Functional Safety Engineer

TUV Rheinland
of North America, Inc.
Chicago Office

2100 Golf Rd., Suite 300
Rolling Meadows, IL 60008

Tel 847-640-5700
Fax 847-640-5702
Mail info@us.tuv.com

North American Headquarters

12 Commerce Road
Newtown, CT 06470

Tel 203-426-0888
Fax 203-426-4009
Toll Free TUV-RHEINLAND
Mail info@tuv.com

This page is left intentionally blank

AUSTRALIA
MTL Instruments Pty Ltd,
10 Kent Road, Mascot, New South Wales, 2020, Australia

Tel: +61 1300 308 374 Fax: +61 1300 308 463
E-mail: mtlsalesanz@eaton.com

BeNeLux
MTL Instruments BV
Ambacht 6, 5301 KW Zaltbommel
The Netherlands

Tel: +31 (0) 418 570290 Fax: +31 (0) 418 541044
E-mail: mtl.benelux@eaton.com

CHINA
Cooper Electric (Shanghai) Co. Ltd
955 Shengli Road, Heqing Industrial Park
Pudong New Area, Shanghai 201201

Tel: +86 21 2899 3817 Fax: +86 21 2899 3992
E-mail: mtl-cn@eaton.com

FRANCE
MTL Instruments sarl,
7 rue des Rosiéristes, 69410 Champagne au Mont d'Or
France

Tel: +33 (0)4 37 46 16 53 Fax: +33 (0)4 37 46 17 20
E-mail: mtlfrance@eaton.com

GERMANY
MTL Instruments GmbH,
Heinrich-Hertz-Str. 12, 50170 Kerpen, Germany

Tel: +49 (0)22 73 98 12- 0 Fax: +49 (0)22 73 98 12- 2 00
E-mail: csckerpen@eaton.com

INDIA
MTL India,
No.36, Nehru Street, Off Old Mahabalipuram Road
Sholinganallur, Chennai- 600 119, India

Tel: +91 (0) 44 24501660 /24501857 Fax: +91 (0) 44 24501463
E-mail: mtlindiasales@eaton.com

ITALY
MTL Italia srl,
Via San Bovio, 3, 20090 Segrate, Milano, Italy

Tel: +39 02 959501 Fax: +39 02 95950759
E-mail: chmninfo@eaton.com

JAPAN
Cooper Crouse-Hinds Japan KK,
MT Building 3F, 2-7-5 Shiba Daimon, Minato-ku,
Tokyo, Japan 105-0012

Tel: +81 (0)3 6430 3128 Fax: +81 (0)3 6430 3129
E-mail: mtl-jp@eaton.com

NORWAY
Norex AS
Fekjan 7c, Postboks 147,
N-1378 Nesbru, Norway

Tel: +47 66 77 43 80 Fax: +47 66 84 55 33
E-mail: info@norex.no

RUSSIA
Cooper Industries Russia LLC
Elektrozavodskaya Str 33
Building 4
Moscow 107076, Russia

Tel: +7 (495) 981 3770 Fax: +7 (495) 981 3771
E-mail: mtlrussia@eaton.com

SINGAPORE
Cooper Crouse-Hinds Pte Ltd
No 2 Serangoon North Avenue 5, #06-01 Fu Yu Building
Singapore 554911

Tel: +65 6645 9864 / 6645 9865 Fax: +65 6 645 9865
E-mail: sales.mtlsing@eaton.com

SOUTH KOREA
Cooper Crouse-Hinds Korea
7F. Parkland Building 237-11 Nonhyun-dong Gangnam-gu,
Seoul 135-546, South Korea.

Tel: +82 6380 4805 Fax: +82 6380 4839
E-mail: mtl-korea@eaton.com

UNITED ARAB EMIRATES
Cooper Industries/Eaton Corporation
Office 205/206, 2nd Floor SJ Towers, off. Old Airport Road,
Abu Dhabi, United Arab Emirates

Tel: +971 2 44 66 840 Fax: +971 2 44 66 841
E-mail: mtlgulf@eaton.com

UNITED KINGDOM
Eaton Electric Limited,
Great Marlings, Butterfield, Luton
Beds LU2 8DL

Tel: +44 (0)1582 723633 Fax: +44 (0)1582 422283
E-mail: mtlenquiry@eaton.com

AMERICAS
Cooper Crouse-Hinds MTL Inc.
3413 N. Sam Houston Parkway W.
Suite 200, Houston TX 77086, USA

Tel: +1 281-571-8065 Fax: +1 281-571-8069
E-mail: mtl-us-info@eaton.com

Powering Business Worldwide

Eaton Electric Limited,
Great Marlings, Butterfield, Luton
Beds, LU2 8DL, UK.
Tel: + 44 (0)1582 723633 Fax: + 44 (0)1582 422283
E-mail: mtlenquiry@eaton.com
www.mtl-inst.com

© 2016 Eaton
All Rights Reserved
Publication No. SM Surge Rev 2 141116
November 2016

EUROPE (EMEA):
+44 (0)1582 723633
mtlenquiry@eaton.com

THE AMERICAS:
+1 800 835 7075
mtl-us-info@eaton.com

ASIA-PACIFIC:
+65 6645 9864 / 6645 9865
sales.mtlsing@eaton.com

The given data is only intended as a product description and should not be regarded as a legal warranty of properties or guarantee. In the interest of further technical developments, we reserve the right to make design changes.