Active electronic switch



Lateral illumination: blue



Colour of Housing: red (No illumination)



Colour of Housing: green (no illumination)

See below:
Approvals and Compliances

Description

- Active electronic switch (LA) / pushbutton (MO) without moving parts
- Triggering of the switching mechanism by light pressure on the switching surface
- Multicolor illumination - the max. currents fot the LEDs must be considered and, if necessary, series resistors must be used
- Unilluminated variants in different colors

Unique Selling Proposition

- Small installation depth
- Variable input voltage
- Trendy design

Characteristics

- Side illumination
- Wearless - no moving parts

Weblinks

pdf data sheet, html datasheet, General Product Information, CAD-Drawings, Product News, Detailed request for product

Technical Data

Electrical Data	
Switching Function	momentary (MO) or latching (LA)
Switching Voltage	max. 60 VDC
Switching Current	max. 100 mA
Electrical Rating	1 W
Switch Resistance OFF	> 10 MΩ
Switch Resistance ON	< 20 Ω
Supply Voltage	5 - 28 VDC
Reverse Polarity Protection	yes
Short Circuit Protection	yes
Lifetime	>20 million actuations

Mechanical Data	
Actuating Force	1 - 3 N
Shock Protection	IK06
Mounting Depth	8 mm
Tightening Torque Plastic Nut	2.5 Nm
Climatical Data	
Operating Temperature	-40 to 85 °C
Storage Temperature	-40 to 85 °C
IP Protection Class Front Side	IP67 acc. to IEC 60529
Salt Spray Test (acc. to IEC60068-2-11)	96 h Residence Time
Material	
Housing	PMMA
Actuator	Stainless Steel
Illuminated ring	PMMA
Rear cover	PC
Mounting Nut	PBT GF30

Approvals and Compliances

Detailed information on product approvals, code requirements, usage instructions and detailed test conditions can be looked up in Details about Approvals

SCHURTER products are designed for use in industrial environments. They have approvals from independent testing bodies according to national and international standards. Products with specific characteristics and requirements such as required in the automotive sector according to IATF 16949, medical technology according to ISO 13485 or in the aerospace industry can be offered exclusively with customer-specific, individual agreements by SCHURTER.

Compliances

The product complies with following Guide Lines

Identification	Details	Initiator	Description
CE	CE declaration of conformity	SCHURTER AG	The CE marking declares that the product complies with the applicable requirements laid down in the harmonisation of Community legislation on its affixing in accordance with EU Regulation 765/2008.
UKCA	UKCA declaration of conformity	SCHURTER AG	The UKCA marking declares that the product complies with the applicable requirements laid down in the British Amendment of Regulation (EC) 765/2008.
RoHS	RoHS	SCHURTER AG	Directive RoHS 2011/65/EU, Amendment (EU) 2015/863
REACH	REACH	SCHURTER AG	On 1 June 2007, Regulation (EC) No 1907/2006 on the Registration, Evaluation, Authorization and Restriction of Chemicals 1 (abbreviated as "REACH") entered into force.

Dimension [mm]

No illumination / Lateral illumination

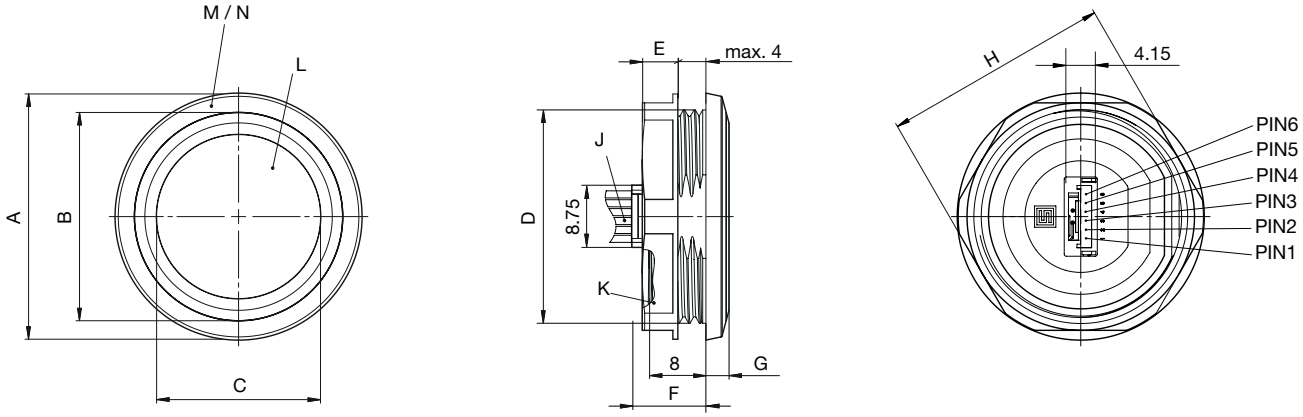

Suitable for connector: JST GHR-04V-S

	MSS19	MSS22	MSS30
A	ø22.00mm	ø25.50mm	ø34.75mm
B	ø18.55mm	ø21.50mm	ø29.30mm
C	ø14.70mm	ø16.90mm	ø23.10mm
D	M 19x0.75	M 22x1.00	M 30x1.50
E	4.00mm	4.00mm	5.00mm
F	11.30mm	11.10mm	10.40mm
G	2.00mm	2.40mm	3.25mm
H	SW / AF 22.00mm	SW / AF 24.00mm	SW / AF 32.00mm
J	Stranded wire		
K	Nut (Plastic)		
L	Actuator (Stainless steel)		
M	Lightguide (Plastic)		
N	Bezel (Plastic)		

Dimension

MSS19 Mounting hole

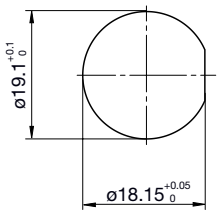

MSS22 Mounting hole

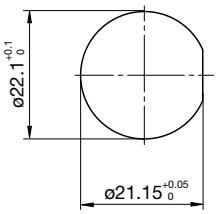

MSS30 Mounting hole

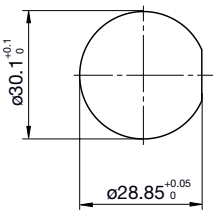

Diagrams

Illuminated

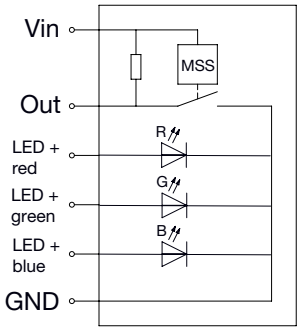

Illuminated

Connection assignment		
PIN-number	Wire color	Function
1	Brown BN	Vin = 5 VDC...28 VDC
2	Black BK	GND
3	White WT	Out
4	Blue BL	LED blue
5	Green GN	LED green
6	Red RD	LED red

Non-illuminated

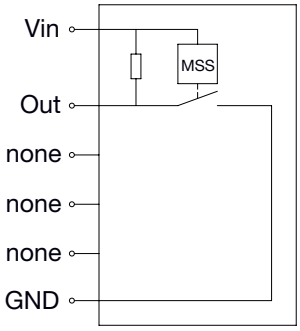

Non-illuminated

Connection assignment		
PIN-number	Wire color	Function
1	Brown BN	Vin = 5 VDC...28 VDC
2	Black BK	GND
3	White WT	Out
4	Not used	
5	Not used	
6	Not used	

Lateral illumination

Operating Data	Forward Voltage min.	Forward Voltage max.
LED red	1.7 V	2.4 V
LED green	2.6 V	3.2 V
LED blue	2.6 V	3.2 V
		Max. Current
Forward current (at +25°C)[1)]		50 mA
Forward current (at +85°C)[1)]		10 mA
Standby current		1mA

1) Linear forward current derating curve

Series resistor must be added.

Order Index Lettering

Laser Marking			
001 =**A**	021 =**U**	041 =÷	061 =**EIN**
002 =**B**	022 =**V**	042 = ✳	062 =**AUS**
003 =**C**	023 =**W**	043 =**=**	063 =**AUF**
004 =**D**	024 =**X**	044 = #	064 =**AB**
005 =**E**	025 =**Y**	045 = ↔	065 =**ON**
006 =**F**	026 =**Z**	046 = ↕	066 =**OFF**
007 =**G**	027 =**0**	047 = →	067 =**UP**
008 =**H**	028 =**1**	048 = ←	068 =**DOWN**
009 =**I**	029 =**2**	049 = ↓	069 =**HIGH**
010 =**J**	030 =**3**	050 = ↑	070 =**LOW**
011 =**K**	031 =**4**	051 = %	071 =**ON/OFF**
012 =**L**	032 =**5**	052 = √	072 =**START**
013 =**M**	033 =**6**	053 =**CTRL**	073 =**RESET**
014 =**N**	034 =**7**	054 =**RETURN**	074 =
015 =**O**	035 =**8**	055 =**SHIFT**	075 =
016 =**P**	036 =**9**	056 =**LOCK**	076 =
017 =**Q**	037 =**+**	057 =**STOP**	077 =
018 =**R**	038 =**-**	058 =**ENTER**	
019 =**S**	039 =**.**	059 =**BACK**	
020 =**T**	040 = x	060 =**LINE**	
Please note that the font size depends on the number of characters			

M	S	S	-	19	-	MO	NO	A10	C0	-	LI	RGB	00R	C0	-	P2	OQ	B	-	S0	NC	WF	-	0	000	K
				1		2	3	4	5		6	7	8	9		10	11	12		13	14	15		16	17	18

Diameter			1
19 mm	=	19	
22 mm	=	22	
30 mm	=	30	

Switch type			2
Momentary	=	MO	
Latching	=	LA	

Switch function			3
Normally open	=	NO	

Rated current			4
100mA	=	A10	

Terminal - Switch			5
Connector integrated	=	C0	

Illumination type			6
Lateral illumination	=	LI	
No illumination	=	00	

Illumination color			7
Multicolor	=	RGB	
No illumination	=	000	

Supply voltage illumination			8
w/o resistors	=	00R	
None	=	000	

Terminal illumination			9
Connector integrated	=	C0	
None	=	00	

Housing material			10
PMMA	=	P2	
PMMA colored	=	P3	

Housing color			11
Red	=	RD	
Green	=	GN	
Blue	=	BL	
Black	=	BK	
Grey	=	GE	
Yellow	=	YL	
White	=	WT	
Orange	=	OR	
Transluzent	=	OQ	

Mounting			12
Thread (M) w/anti-rotation-protection	=	B	

Actuator material			13
Stainless steel	=	S0	

Actuator color			14
Natural	=	NC	

Actuator style			15
Finger guide flat	=	WF	

Lettering type			16
None	=	0	

Marking type			17
None	=	0	

Accessories			18
Hex nut plastic	=	K	

All Variants

Diameter [mm]	Rated Current [A]	Illumination type	Illumination color	Colour of Housing	Switching Function	Suitable cable	Order Number
19	100 mA	Without	No illumination	blue	latching (LA)	3 Wires	3-126-736
19	100 mA	Without	No illumination	black	latching (LA)	3 Wires	3-126-737
19	100 mA	Without	No illumination	grey	latching (LA)	3 Wires	3-126-738
19	100 mA	Without	No illumination	white	latching (LA)	3 Wires	3-126-740
19	100 mA	Without	No illumination	red	latching (LA)	3 Wires	3-126-734
19	100 mA	Without	No illumination	green	latching (LA)	3 Wires	3-126-735
19	100 mA	Without	No illumination	yellow	latching (LA)	3 Wires	3-126-739
19	100 mA	Without	No illumination	orange	latching (LA)	3 Wires	3-126-741
19	100 mA	Lateral illumination	Multicolor	translucent	latching (LA)	6 Wires	3-126-723
19	100 mA	Without	No illumination	blue	momentary (MO)	3 Wires	3-126-728
19	100 mA	Without	No illumination	black	momentary (MO)	3 Wires	3-126-729
19	100 mA	Without	No illumination	grey	momentary (MO)	3 Wires	3-126-730
19	100 mA	Without	No illumination	white	momentary (MO)	3 Wires	3-126-732
19	100 mA	Without	No illumination	red	momentary (MO)	3 Wires	3-126-726
19	100 mA	Without	No illumination	green	momentary (MO)	3 Wires	3-126-727
19	100 mA	Without	No illumination	yellow	momentary (MO)	3 Wires	3-126-731
19	100 mA	Without	No illumination	orange	momentary (MO)	3 Wires	3-126-733
19	100 mA	Lateral illumination	Multicolor	translucent	momentary (MO)	6 Wires	3-126-722
22	100 mA	Without	No illumination	blue	latching (LA)	3 Wires	3-126-772
22	100 mA	Without	No illumination	black	latching (LA)	3 Wires	3-126-773
22	100 mA	Without	No illumination	grey	latching (LA)	3 Wires	3-126-774
22	100 mA	Without	No illumination	white	latching (LA)	3 Wires	3-126-776
22	100 mA	Without	No illumination	red	latching (LA)	3 Wires	3-126-770
22	100 mA	Without	No illumination	green	latching (LA)	3 Wires	3-126-771
22	100 mA	Without	No illumination	yellow	latching (LA)	3 Wires	3-126-775
22	100 mA	Without	No illumination	orange	latching (LA)	3 Wires	3-126-777
22	100 mA	Lateral illumination	Multicolor	translucent	latching (LA)	6 Wires	3-126-759
22	100 mA	Without	No illumination	blue	momentary (MO)	3 Wires	3-126-764
22	100 mA	Without	No illumination	black	momentary (MO)	3 Wires	3-126-765
22	100 mA	Without	No illumination	grey	momentary (MO)	3 Wires	3-126-766
22	100 mA	Without	No illumination	white	momentary (MO)	3 Wires	3-126-768
22	100 mA	Without	No illumination	red	momentary (MO)	3 Wires	3-126-762
22	100 mA	Without	No illumination	green	momentary (MO)	3 Wires	3-126-763
22	100 mA	Without	No illumination	yellow	momentary (MO)	3 Wires	3-126-767
22	100 mA	Without	No illumination	orange	momentary (MO)	3 Wires	3-126-769
22	100 mA	Lateral illumination	Multicolor	translucent	momentary (MO)	6 Wires	3-126-758
30	100 mA	Without	No illumination	blue	latching (LA)	3 Wires	3-126-807
30	100 mA	Without	No illumination	black	latching (LA)	3 Wires	3-126-808
30	100 mA	Without	No illumination	grey	latching (LA)	3 Wires	3-126-809
30	100 mA	Without	No illumination	white	latching (LA)	3 Wires	3-126-811
30	100 mA	Without	No illumination	red	latching (LA)	3 Wires	3-126-805
30	100 mA	Without	No illumination	green	latching (LA)	3 Wires	3-126-806
30	100 mA	Without	No illumination	yellow	latching (LA)	3 Wires	3-126-810
30	100 mA	Without	No illumination	orange	latching (LA)	3 Wires	3-126-812
30	100 mA	Lateral illumination	Multicolor	translucent	latching (LA)	6 Wires	3-126-794

Diameter [mm]	Rated Current [A]	Illumination type	Illumination color	Colour of Housing	Switching Function	Suitable cable	Order Number
30	100 mA	Without	No illumination	blue	momentary (MO)	3 Wires	3-126-799
30	100 mA	Without	No illumination	black	momentary (MO)	3 Wires	3-126-800
30	100 mA	Without	No illumination	grey	momentary (MO)	3 Wires	3-126-801
30	100 mA	Without	No illumination	white	momentary (MO)	3 Wires	3-126-803
30	100 mA	Without	No illumination	red	momentary (MO)	3 Wires	3-126-797
30	100 mA	Without	No illumination	green	momentary (MO)	3 Wires	3-126-798
30	100 mA	Without	No illumination	yellow	momentary (MO)	3 Wires	3-126-802
30	100 mA	Without	No illumination	orange	momentary (MO)	3 Wires	3-126-804
30	100 mA	Lateral illumination	Multicolor	translucent	momentary (MO)	6 Wires	3-126-793

Availability for all products can be searched real-time:https://www.schurter.com/en/Stock-Check/Stock-Check-SCHURTER

Packaging unit 10 Pcs

Accessories

	Description
	Cable to MSS Cable to MSS

22.03.2022

The specifications, descriptions and illustrations indicated in this document are based on current information. All content is subject to modifications and amendments. Information furnished is believed to be accurate and reliable. However, users should independently evaluate the suitability and test each product selected for their own applications.