JUMO GmbH & Co. KG
Delivery address: Mackenrodtstraße 14
36039 Fulda, Germany
Postal address: 36035 Fulda, Germany
Phone: +49 661 6003-0
Fax: +49 661 6003-607
E-mail: mail@jumo.net
Internet: www.jumo.net

JUMO Instrument Co. Ltd.
JUMO House
Temple Bank, Riverway
Harlow, Essex CM20 2DY, UK
Phone: +44 1279 635533
Fax: +44 1279 635262
E-mail: sales@jumo.co.uk
Internet: www.jumo.co.uk

JUMO Process Control, Inc.
8 Technology Boulevard
Canastota, NY 13032, USA
Phone: 315-697-5866
1-800-554-JUMO
Fax: 315-697-5867
E-mail: info@jumo.us
Internet: www.jumo.us

JUMO dTRON 304/308/316 Compact Controller with program function



JUMO dTRON 316
Type 703041/ ...



JUMO dTRON 308H
Type 703042/ ...



JUMO dTRON 308Q
Type 703043/ ...



JUMO dTRON 304
Type 703044/ ...

Brief description

The JUMO dTRON 300 series of controllers includes four freely programmable devices in different DIN formats for controlling temperature, pressure and other process variables. As a temperature controller (TR) according to EN 14597 the devices are used in heat-generating plants to control the temperature of liquids or gases (mode of action: 1B).
The high-contrast, multicolor LC display for process value, setpoint and operator prompting contains two four-digit 7-segment displays, two single-character 16-segment displays, display of the active setpoints, six switch position indicators, and displays for the dimensional unit, ramp function and manual operation.
Simple operation through 4 keys. The instruments can be used as 2-state, 3-state, modulating or continuous controllers. The controller software includes a program or ramp function, parameter set changeover, two autotuning (self-optimization) procedures, a math and logic module, as well as 4 limit comparators.
Linearizations for the usual transducers are stored, and a customer-specific linearization table can be programmed.
A setup program is available for user-friendly configuration from a PC.
A serial interface for RS422/485 or Profibus-DP can be used to integrate the instruments into a data network.
The electrical connection is made at the back, via screw terminals.
The possible input and output configurations are shown in the following block diagram. The option boards are universally applicable for all instruments in the series.

Block structure

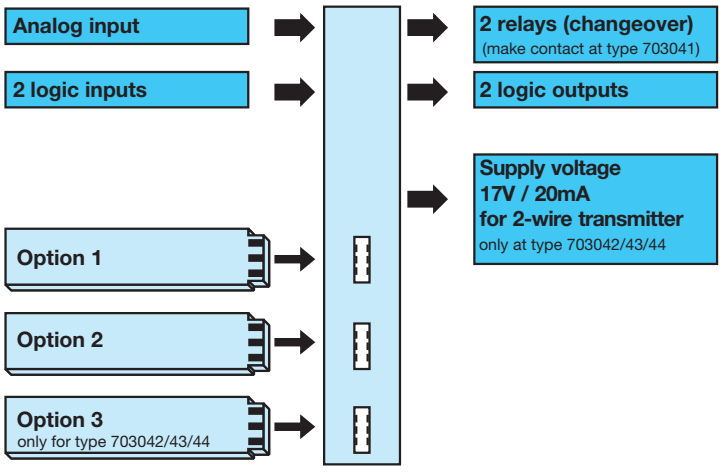

Option boards:
- Analog input
- 2 logic inputs
- 1 relay 230V/8A (changeover)
- 2 relays 230V/3A (make contact) with common pole
- 1 solid-state relay
- Analog output (voltage/current)
- RS422/485 interface
- PROFIBUS-DP interface

Key features

- Up to two programmable analog inputs
- Four programmable setpoints, two parameter sets
- Program function with 8 segments, or ramp function
- Math and logic module
- 4 limit comparators
- Two timers
- Two self-optimization procedures
- Fast, user-friendly configuration through the setup program with program editor
- RS422/485 interface or PROFIBUS-DP interface

Approvals/marks of conformity (see technical data)

Self-optimization

Standard features include the tried and tested self-optimization, which makes it possible for the controller to be matched to the control loop by a user who is not a control technology expert.
This functions by evaluating the response of the control loop to specific changes in the manipulating variable. Either an oscillatory method or a step-response test can be selected. The step-response test is used, for example, in the plastics industry or in processes where the oscillatory method cannot be employed. The controller parameters that are calculated are: proportional band, reset time, derivative time, cycle time and filter time constant.

Customer-specific linearization

In addition to the linearizations for the usual transducers, a customer-specific linearization can also be created. The programming is carried out in the setup program, in the form of a table of values or a formula.

User data

Parameters which are frequently changed by the user can be combined at the operating level under “User data” (only through the setup program).

Math and logic module

Order details: Extra code 214
The math module makes it possible to combine values such as the setpoints, output levels and measurements from the analog inputs into a mathematical formula.
The logic module can be used, for instance, to make a logical combination of logic inputs and limit comparator states.
Up to two math or logic formulae can be entered through the setup program, and the results of the calculations can be presented at the outputs or used for internal purposes.

Special types of controller

Order details: Extra codes 217, 218 and 219
The instrument can be operated as a differential, humidity or ratio controller.

Logic functions

- Start/cancel self-optimization
- Change to manual mode
- Hold/cancel ramp
- Controller off
- Setpoint changeover
- Parameter set switching
- Key/level inhibit
- Text display
- Display off
- Acknowledge limit comparators
- Program start/hold/cancel
- Timer start/stop

The logic functions can be combined with one another (only through the setup program).

Functions of the outputs

- Analog input variables
- Math
- Process value
- Setpoint
- Ramp end value
- Control deviation
- Output level
- Controller outputs
- Limit comparators
- Control contacts
- Logic inputs
- Logic formula
- Program end
- Timer signals
- Program/automatic signal

Ramp function

Either a rising or a falling ramp function can be used (increase or decrease in the setpoint). The change in setpoint value SP at t_0 is the final value for the ramp. The ramp starts with the setpoint at time t_0. The slope of the ramp can be programmed; the sign (direction) of the slope is given by the relationship between the setpoint at time t_0 and the SP value. When the supply voltage is switched on, the ramp function starts with the momentary process value.

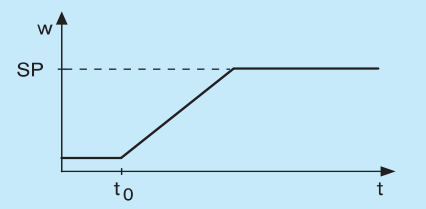

Timers

Two timers are available for time-dependent control. The status of the timers can be switched through to the logic outputs or internally processed for the activation or de-activation of time-dependent processes.

Setup program (accessory)

The setup program for configuring the instrument is available in English, French and German. Using a PC, you can create and edit sets of data, and transfer them to the controller or read them out from the instrument. The data sets are stored and managed.
Program editor
For the easy creation of programs.
Startup function
To check the control-loop behavior.

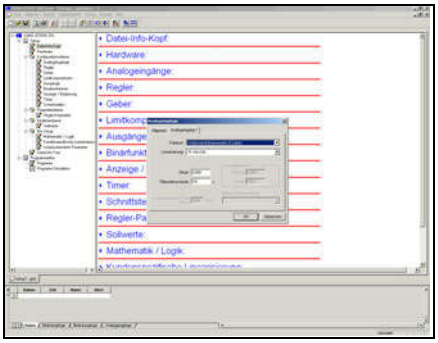

Displays and controls



(1)	**7-segment display** (factory setting: process value) four-digit, red; decimal place is configurable (automatic adjustment on display overflow)
(2)	**Active setpoint** (factory setting: SP1) SP1, SP2, SP3, SP4 (SP=setpoint); green;
(3)	**7-segment display** (factory setting: setpoint) four-digit, green; decimal place is configurable, also used for operator prompting (display of parameter and level symbols)
(4)	**Keys**
(5)	**Indication** yellow, for - switch status of logic outputs 1 — 6 (display lights up = ON) - ramp/program function is active - active manual operation
(6)	**16-segment display for the unit °C/°F and text** two-digit, green; with symbols for h, min, % additional display options through the setup program

Program function

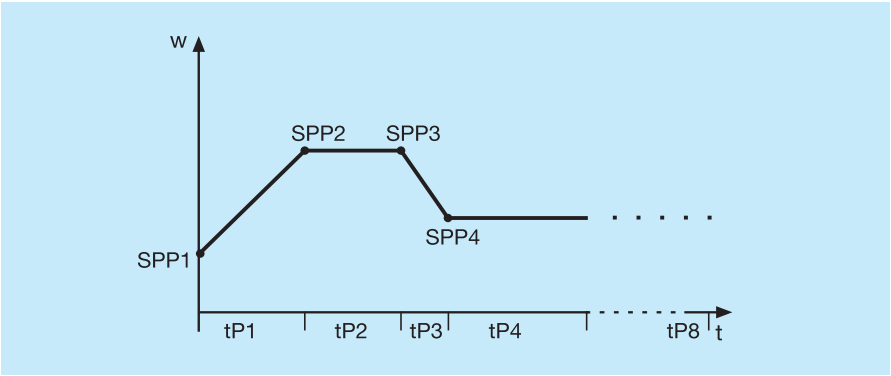

A setpoint profile can be implemented with a maximum of 8 program segments. The settings for the segment setpoints (SPP1 — SPP8) and segment times (tP1 — tP8) are carried out at the user level. The time scale can be configured as mm:ss or hh:mm (s = seconds, h = hours).
A program-end signal can be generated, and the program can be halted or canceled.
Further functions can be defined through the setup program (start at process value, cyclical program handling, segment-by-segment assignment of parameter sets and four control contacts). The program profile can also be visualized.

Warm-up ramp for hot-channel controller

The warm-up ramp for hot-channel equipment is used, for example, for the gentle operation of ceramic heater elements. Damage can be avoided by allowing moisture to evaporate slowly from the hygroscopic heater elements during the warm-up phase.

Interfaces

RS422/RS485 interface

The serial interface is used for communication with higher-level (supervisory) systems.
The Modbus protocol is used for transmission.

PROFIBUS-DP

The Profibus-DP interface can be used to integrate the controller into a fieldbus system operating according to the Profibus-DP standard. This Profibus version is especially designed for communication between automation systems and decentralized peripheral devices at the field level, and optimized for speed.
Data transmission is made serially, using the RS485 standard.
GSD generator, the project-planning tool that is supplied with the package (GSD = Gerätestammdaten, i.e. device data), is used to make a selection of device characteristics for the controller to create a standardized GSD file that is used to integrate the controller into the fieldbus system.

Parameter level

All the parameters and their meanings are included in the table. Some parameters may be missing or meaningless for a particular type of controller. Two parameter sets can be stored, to handle special applications.

Parameter	Value range	Factory setting	Meaning
Proportional band	0 to 9999 digits	0 digits	Size of the proportional band 0 means that the controller structure is out of action!
Derivative time	0 to 9999 sec	80 sec	Influences the differential component of the controller output signal
Reset time	0 to 9999 sec	350 sec	Influences the integral component of the controller output signal
Cycle time	0 to 999.9 sec	20.0 sec	When using a switched output, the cycle time should be chosen so that the energy flow to the process is as continuous as is practicable without overloading the switching elements.
Contact spacing	0 to 999.9 digits	0.0 digits	The spacing between the two control contacts for 3-state or modulating controllers
Switching differential	0 to 999.9 digits	1.0 digits	Hysteresis for switching controllers with proportional band = 0
Actuator time	5 to 3000 sec	60 sec	Actuator time range used by the control valve for modulating controllers
Working point	-100 to +100%	0%	The output level for P and PD controllers (if x = w then y = Y0)
Output level limiting	0 to 100%	100%	The maximum limit for the output level
	-100 to +100 %	-100%	The minimum limit for the output level

Technical data

Thermocouple input

Designation		Measuring range	Measuring accuracy	Ambient temperature error
Fe-Con L		-200 to + 900°C	≤0.25%	100 ppm /°C
Fe-Con J	EN 60584	-200 to +1200°C	≤0.25%	100 ppm /°C
Fe-Con U		-200 to + 600°C	≤0.25%	100 ppm /°C
Cu-Con T	EN 60584	-200 to + 400°C	≤0.25%	100 ppm /°C
NiCr-Ni K	EN 60584	-200 to +1372°C	≤0.25%	100 ppm /°C
NiCr-Con E	EN 60584	-200 to +1000°C	≤0.25%	100 ppm /°C
NiCrSi-NiSi N	EN 60584	-100 to +1300°C	≤0.25%	100 ppm /°C
Pt10Rh-Pt S	EN 60584	0 to 1768°C	≤0.25%	100 ppm /°C
Pt13Rh-Pt R	EN 60584	0 to 1768°C	≤0.25%	100 ppm /°C
Pt30Rh-Pt6Rh B	EN 60584	0 to 1820°C	≤0.25% in the range 300 to 1820°C	100 ppm /°C
W5Re-W26Re C		0 to 2320 °C	≤0.25%	100 ppm /°C
W3Re-W25Re D		0 to 2495 °C	≤0.25%	100 ppm /°C
W3Re-W26Re		0 to 2400 °C	≤0.25%	100 ppm /°C
Cold junction		Pt100, internal		

Input for resistance thermometer

Designation		Connection	Measuring range	Measuring accuracy		Ambient temperature error
				3-/4-wire	2-wire	
Pt100	EN 60751 (factory setting)	2-wire / 3-wire / 4-wire	-200 to +850°C	≤0.05%	≤0.4%	50 ppm / °C
Pt500	EN 60751	2-wire / 3-wire / 4-wire	-200 to +850°C	≤0.2%	≤0.4%	100 ppm /°C
Pt1000	EN 60751	2-wire / 3-wire / 4-wire	-200 to +850°C	≤0.1%	≤0.2%	50 ppm /°C
KTY11-6		2-wire	-50 to +150°C		≤2.0%	50 ppm /°C
Sensor lead resistance		max. 30Ω per lead for 3-wire or 4-wire circuit				
Measuring current		approx. 250µA				
Lead compensation		Not required for 3-wire or 4-wire circuit. With a 2-wire circuit, the lead resistance can be compensated in software by a correction of the process value.				

Input for standard signals

Designation	Measuring range	Measuring accuracy	Ambient temperature error
Voltage	0(2) — 10V 0 — 1V Input resistance R_{IN} > 100kΩ	≤0.05% ≤0.05%	100 ppm / °C 100 ppm / °C
Current	0(4) — 20mA, voltage drop ≤ 1.5V	≤0.05%	100 ppm / °C
Heating current	0 — 50mA AC	≤1%	100 ppm / °C
Resistance transmitter	min. 100Ω, max. 4kΩ	±4Ω	100 ppm / °C

Logic inputs

Floating contacts	

Measuring circuit monitoring

In the event of a fault, the outputs move to a defined (configurable) status.

Sensor	Overrange / underrange	Probe or lead short-circuit	Probe or lead break
Thermocouple	•	-	•
Resistance thermometer	•	•	•
Voltage 2 — 10V	•	•	•
0 — 10V	•	-	-
0 — 1V	•	-	-
Current 4 — 20mA	•	•	•
0 — 20mA	•	-	-
Resistance transmitter	-	-	•

• = recognized - = not recognized

Outputs

Relay (changeover) for type 703042/43/44 contact rating contact life	 5A at 230VAC resistive load [1] 350,000 operations at rated load / 750,000 operations at 1A
Relay (changeover) (option) contact rating contact life	 8A at 230V AC resistive load [1] 100,000 operations at rated load / 350,000 operations at 3A
Relay (make) for type 703041 contact rating contact life	 3A at 230VAC resistive load [2] 150,000 operations at rated load / 350,000 at 1A
Relay (changeover) (option) contact rating contact life	 3A at 230VAC resistive load 350,000 operations at rated load / 900,000 operations at 1A
Logic output	0/12V / 30mA max. (sum of all output currents) or 0/18V / 25mA max. (sum of all output currents)
Solid-state relay (option) contact rating protection circuitry	The holding current of the triac is at least 50mA. 1A at 230V varistor
Voltage (option) output signals load resistance accuracy	 0 — 10V / 2 — 10V $R_{load} \geq 500\Omega$ ≤ 0.5%
Current (option) output signals load resistance accuracy	 0 — 20mA / 4 — 20mA $R_{load} \leq 500\Omega$ ≤ 0.5%
Supply voltage for 2-wire transmitter for type 703042/43/44 voltage	electrically isolated, not stabilized 17V DC at 20mA load, 25V DC with no load

1. 3A with devices certified to DIN EN 14597
2. 1A with devices certified to DIN EN 14597

Controller

Controller type	2-state controller (factory setting), 3-state controller, modulating controller, continuous controller
Controller structures	P, PD, PI, PID
A/D converter	dynamic resolution up to 16-bit
Sampling time	50msec, 90msec, 150msec, 250msec (factory setting: 250msec)

Electrical data

Supply voltage (switchmode PSU)	110 — 240V AC -15/+10%, 48 — 63Hz 20 — 30V AC/DC, 48 — 63Hz
Electrical safety	to EN 60730 overvoltage category III, pollution degree 2
Power consumption	Type 703041: max. 8VA; type 703042/43/44: max. 13VA
Data backup	EEPROM
Electrical connection	at the back, via screw terminals, conductor cross-section up to 2.5mm^2 with core ferrules (length: 10mm)
Electromagnetic compatibility Interference emission Interference immunity	EN 61326-1 Class B to industrial requirements

Housing

Housing type	plastic housing for panel mounting to IEC 61554
Depth behind panel	90 mm
Ambient/storage temperature range	0 to 55°C / -30 to +70°C
Climatic conditions	rel. humidity ≤90% annual mean, no condensation
Operating position	horizontal
Protection	to EN 60529, front IP65 / back IP20
Weight (fully fitted)	Type 703041: approx. 220g Type 703042/43: approx. 380g Type 703044: approx. 490g

Interface

Modbus

Interface type	RS422/485
Protocol	Modbus, Modbus Integer
Baud rate	9600, 19200, 38400
Device address	0 — 255
Max. number of nodes	32

PROFIBUS

Device address	0 — 255

DIN approved sensors for operation in air

	Sensor type	Temperature range[1]	Nom. length mm	Process connection
Resistance thermometers acc. to data sheet 90.2006	2 x Pt 100	-170 ... +700°C	500, 700, 1000	Sliding stop flange
	2 x Pt 100	-170 ... +700°C	500, 700, 1000	Screwed pipe joint G1/2
Thermocouples acc. to data sheet 90.1006	2 x NiCr-Ni, type „K“	-35 ... +800°C	500, 700, 1000	Sliding stop flange
	2 x FeCuNi, type „L“	-35 ... +700°C	500, 700, 1000	
	2 x NiCr-Ni, type „K“	-35 ... +1000°C	250, 355, 500	
	1 x Pt10Rh-Pt, type „S“	0 ... 1300°C	250, 355, 500	
	2 x Pt10Rh-Pt, type „S“	0 ... 1300°C	250, 355, 500	
	1 x Pt30Rh-Pt6Rh, type „B“	600 ... 1500°C	250, 355, 500	
	2 x Pt30Rh-Pt6Rh, type „B“	600 ... 1500°C	250, 355, 500	

1. This is the sensor temperature range. The approval of the device does only apply to the temperature ranges listed on page 4/10.

DIN approved sensors for operation in water and oill

	Sensor type	Temperatur range[1]	Fitting length mm	Process connection
Resistance thermometers acc. to data sheet 90.2006	1 x Pt 100	-40 ... +400°C	100	Screw fitting G1/2
	2 x Pt 100		100	
	2 x Pt 100	-170 ... +550°C	65 ... 670	Screwed pipe joint G1/2
	1 x Pt 100		65 ... 670	
	1 x Pt 100	-170 ... +480°C	250	Screw fitting G1/2
	2 x Pt 100		250	
	1 x Pt 100	-40 ... +480°C	100, 160, 220	Weld-in pocket
	1 x Pt 100	-40 ... +400°C	190	
	2 x Pt 100	-40 ... +400°C	190	
	2 x Pt 100	-40 ... +480°C	100, 160, 220	
	3 x Pt 100	-40 ... +400°C	100, 160, 220	
	1 x Pt 100	-170 ... +480°C	100, 160, 220	
Thermocouples acc. to data sheet 90.1006	2 x NiCr-Ni, type „K“	-35 ... +550°C	65 ... 670	Screwed pipe joint G1/2
	1 x NiCr-Ni, type „K“		65 ... 670	
	2 x FeCuNi, type „L“		65 ... 670	
	1 x FeCuNi, type „L“		65 ... 670	
	1 x Fe-CuNi, type „L“	-35 ... +480°C	220	Weld-in pocket
	2 x Fe-CuNi, type „L“		220	

1. This is the sensor temperature range. The approval of the device does only apply to the temperature ranges listed on page 4/10.

Approvals/marks of conformity

Mark of conformity	Testing laboratory	Certificates/certification numbers	Test basis	valid for
DIN	DIN CERTCO	Register No. TR1187	DIN EN 14597	all types
GL - Hardware GL - Software	Germanischer Lloyd	Type Approval Certificate No. 45 059-07 HH	GL-Approval Category C, EMC1	703044/191-320-23/214, 062
c UL us	Underwriters Laboratories	E 201387	UL 61010-1 CAN/CSA-C22.2 No. 61010-1	all types

Connection diagram, type 703041

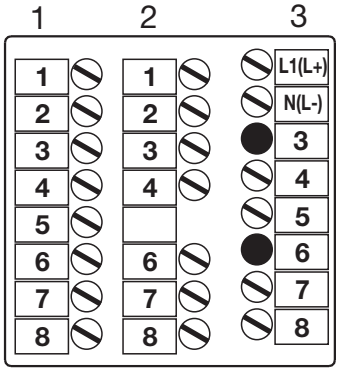

Terminal strip 3

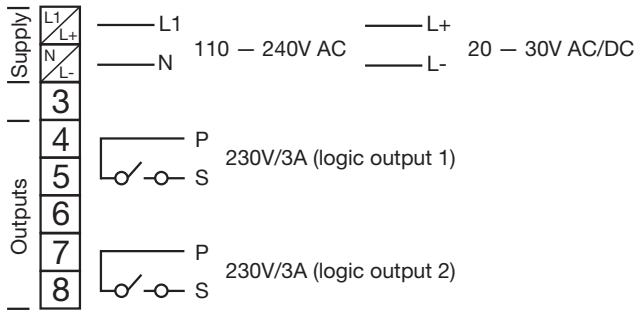

Terminal strip 2

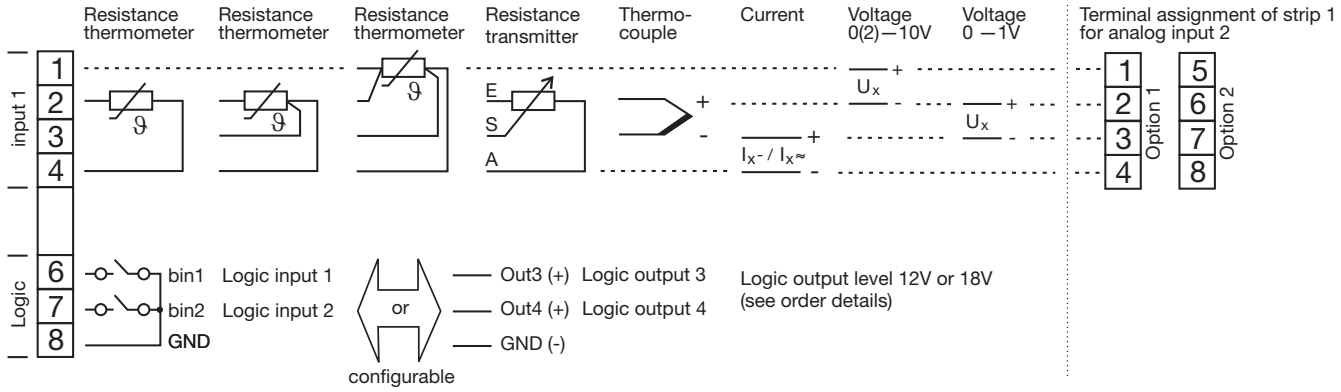

Terminal strip 1

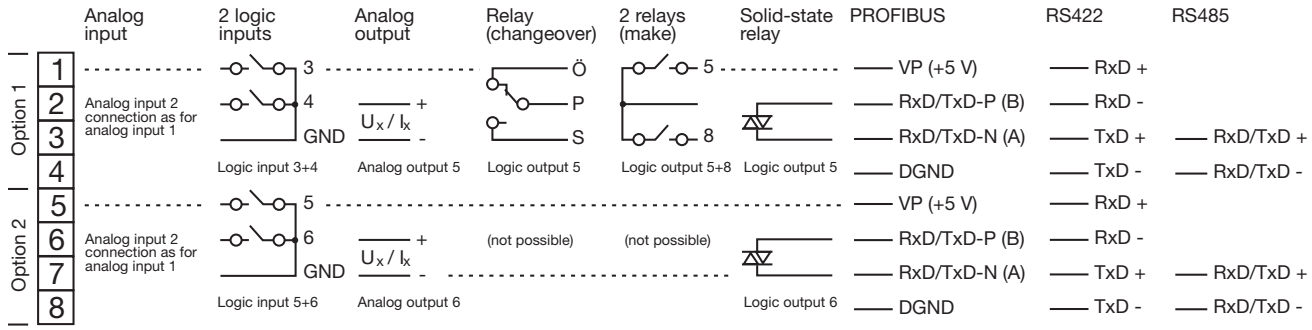

Connection diagram, type 703042/43/44

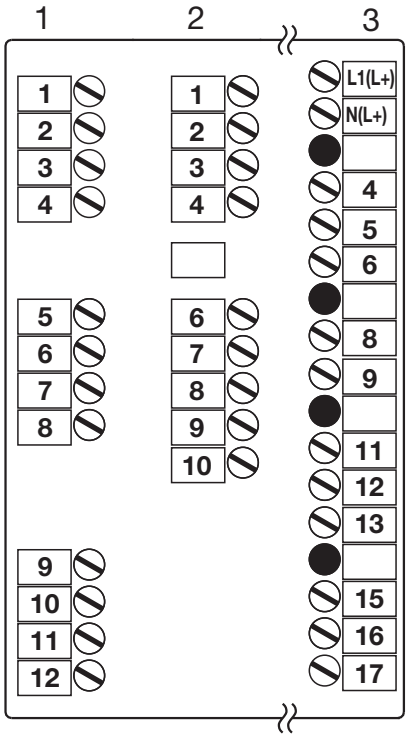

Terminal strip 3

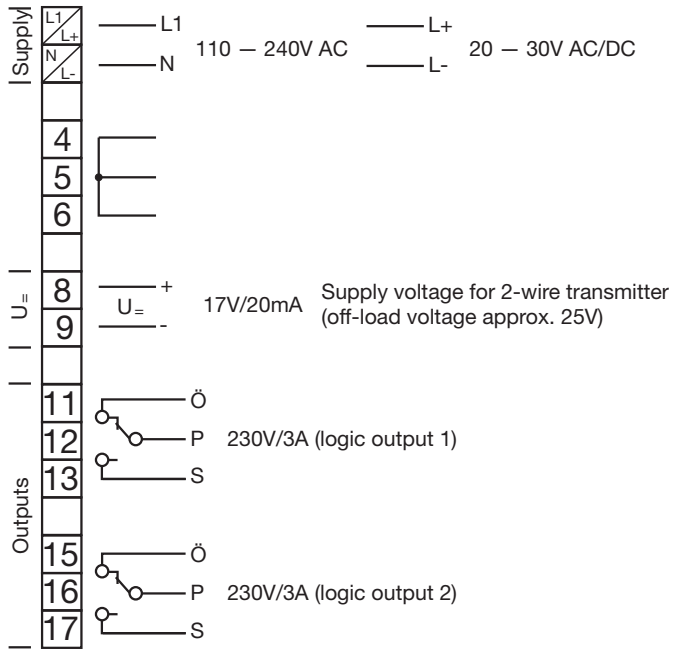

Terminal strip 2

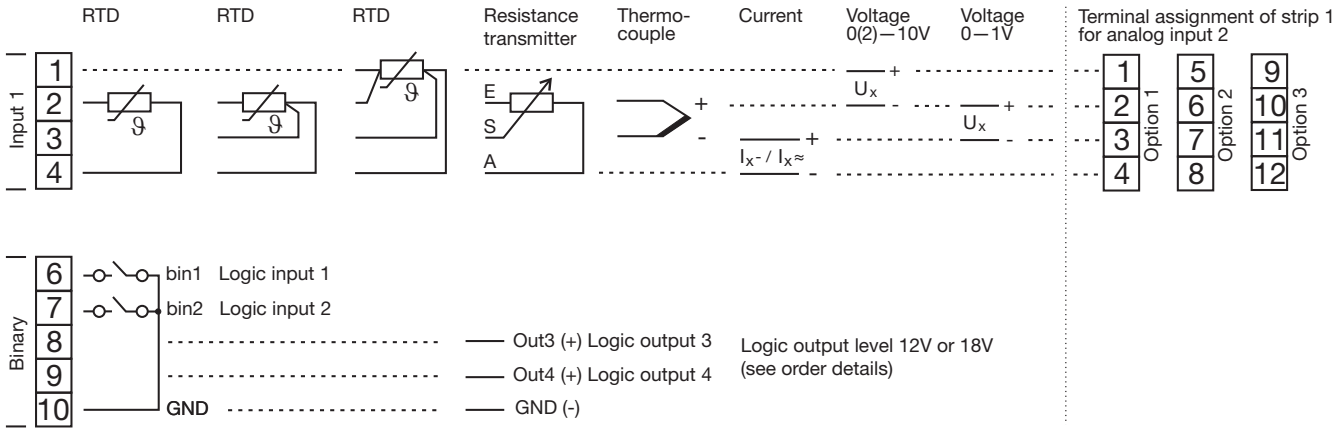

Terminal strip 1

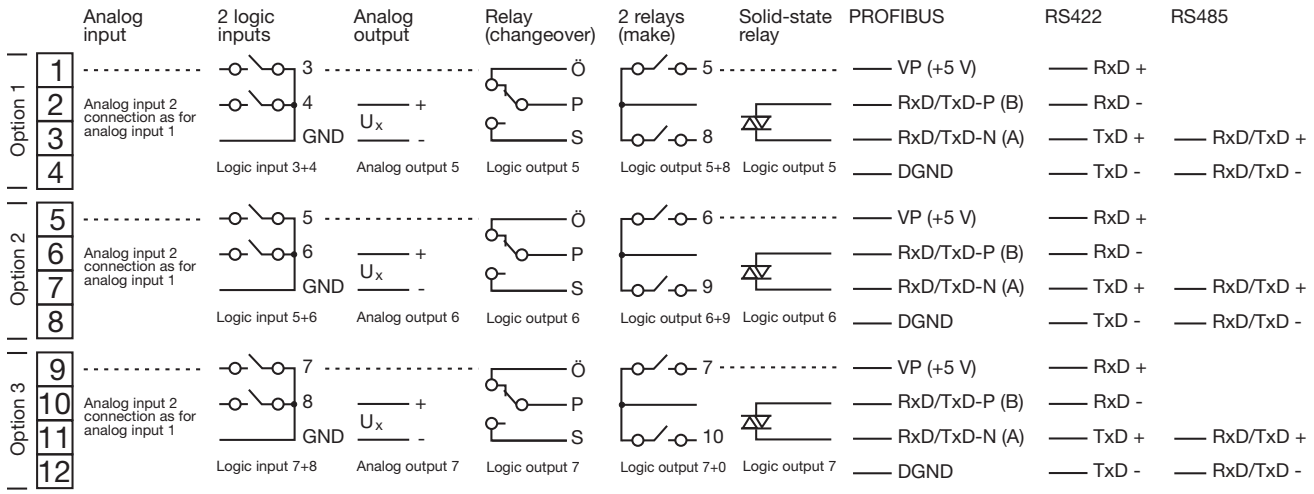

Dimensions

Type 703041

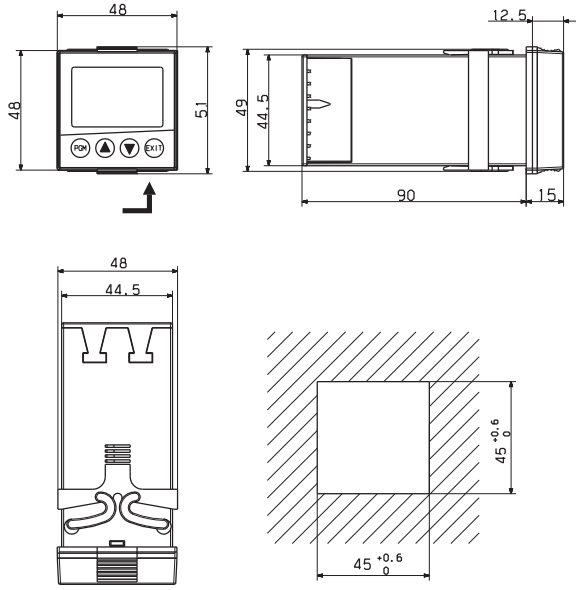

Type 703042/43

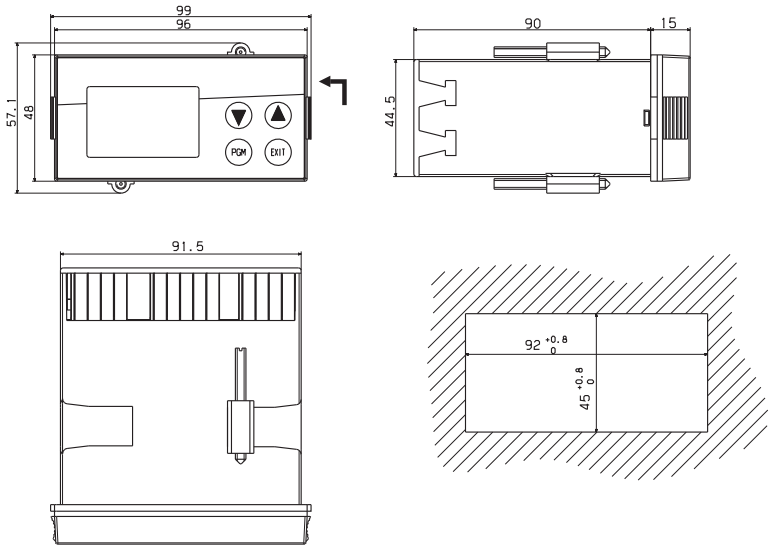

Type 703044

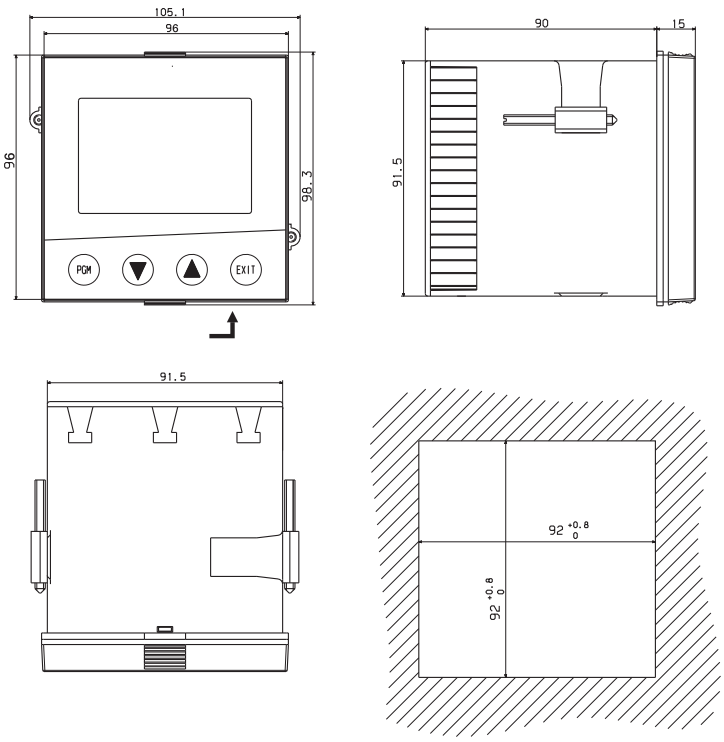

Close mounting Minimum spacing of panel cut-outs		
Type	horizontal	vertical
without setup connector:		
703041	11 mm	30 mm
703042 (portrait format)	11 mm	30 mm
703043 (landscape fmt.)	30 mm	11 mm
703044	11 mm	30 mm
with setup connector (see arrow):		
703041	11 mm	65 mm
703042 (portrait format)	11 mm	65 mm
703043 (landscape fmt.)	65 mm	11 mm
703044	11 mm	65 mm

Order details

	Basic type
703041	JUMO dTRON316, format 48mm x 48mm incl. 1 analog input, 2 relays and 2 logic inputs or 2 logic outputs
703042	JUMO dTRON308, format 48mm x 96mm (portrait format) incl. 1 analog and 2 logic inputs, 2 relays and 2 logic outputs
703043	JUMO dTRON308, format 96mm x 48mm (landscape format) incl. 1 analog and 2 logic inputs, 2 relays and 2 logic outputs
703044	JUMO dTRON304, format 96mm x 96mm incl. 1 analog and 2 logic inputs, 2 relays and 2 logic outputs

			Basic type extensions
1			**Basic type 1**
			Version
	8		Standard, with factory settings
	9		Programming to customer specification
			Logic outputs (2 available as standard)
		1	0 / 12V
		2	0 / 18V

				Type 703042/43/44	Type 703041 (no option 3)		
1	**2**	**3**	**Option slots**	**Max. number**	**Max. number**	**Option 1**	**Option 2**
0	0	0	not used			X	X
1	1	1	Analog input 2 (universal)	1	1	X	X
2	2	2	Relay (changeover)	2	1	X	-
3	3	3	2 relays (make contact)	2	1	X	-
4	4	4	Analog output	2	2	X	X
5	5	5	2 logic inputs	2	1	X	X
6	6	6	Solid-state relay 1A	2	2	X	X
7	7	7	RS422/485 interface	1	1	X	X
8	8	8	Profibus-DP interface	1	1	X	X

X = available in this option slot, - = not available in this option slot

	Supply voltage
2 3	110 — 240V AC -15/+10%, 48 — 63Hz
2 5	AC/DC 20…30V, 48…63Hz

	Extra codes
0 0 0	none
2 1 4	Math and logic module
2 1 7	Ratio controller (requirement: 2 analog inputs)
2 1 8	Differential controller (requirement: 2 analog inputs)
2 1 9	Humidity controller (requirement: 2 analog inputs)

	Approvals	
0 0 0	none	
0 5 6	DIN EN 14597	
	dTRON 304 with GL approval	on request

/ 1 – – – / ,

703041 / 1 8 1 – 1 4 0 – 2 3 / 0 0 0 ,

Scope of delivery: - 1 controller
- 1 seal
- mounting brackets
- 1 operating manual B70.3041.0 (format DIN A6)

A CD with demo setup software and PDF documents (operating manual and other documentation) can be ordered separately.
Individual documents and programs can be downloaded at www.jumo.net (a charge is made for enabling the software).