AERASGARD® ACO2-W
AERASGARD® ACO2-SD

On-wall CO2 sensor and measuring transducer, self-calibrating, with multi-range switching and active / switching output

S+S REGELTECHNIK

Maintenance-free on-wall sensor **AER**ASGARD® **ACO2-SD** with active output, automatic calibration (fixed), in an impact-resistant plastic housing with quick-locking screws, for determining the CO2 content of the air (0…2000 ppm/0…5000 ppm). The measuring transducer converts the measured values into a standard signal of 0-10 V.

Maintenance-free on-wall sensor **AER**ASGARD® **ACO2-W** with active/switching output, automatic calibration (can be deactivated), in an impact-resistant plastic housing with quick-locking screws, optionally with/without display, for determining the CO2 content of the air (0…2000 ppm/0…5000 ppm). he measuring transducer converts the measured values into a standard signal of 0-10 V or 4…20 mA (switchable).

The sensor is used in offices, hotels, convention centres, apartments, shops, etc. for the purpose of evaluating the indoor climate. This enables energy-saving room ventilation on an as-needed basis, thereby reducing operating costs and improving well-being. One sensor for every 30 m² of room area is recommended.

The CO2 measurement is performed using an optical **NDIR sensor** (non-dispersive infra-red technology). The detection range is calibrated for standard applications such as monitoring residential rooms and conference rooms.

For more information, see the start of the chapter.

TECHNICAL DATA

Power supply:	24 V AC / DC (± 10 %)
Power consumption:	< 1.5 W / 24 V DC typical; < 2.9 VA / 24 V AC typical; Peak current 200 mA
Sensor:	optical NDIR sensor (non-dispersive infra-red technology), with manual calibration (via zero button), **ACO2-SD** with automatic calibration (fixed) **ACO2-W** with automatic calibration (can be deactivated via DIP switches)
Measuring range:	**Multi-range switching** (selectable via DIP switches) 0…2000 ppm; 0…5000 ppm
Output:	**ACO2-SD** 0-10 V (fixed) **ACO2-W** 0-10 V **or** 4…20 mA, working resistance < 800 Ω (selectable via DIP switches), with offset potentiometer (± 10 % of the measuring range)
Relay output:	**ACO2-SD** without changeover contact **ACO2-W** with potential-free **changeover contact** (24 V / 1 A), switchpoint adjustable
Measuring accuracy:	typically ± 30 ppm ± 3 % of measured value
Temperature dependence:	± 5 ppm / °C or ± 0.5 % of measured value / °C (whichever is higher)
Pressure dependence:	± 0.13 % / mm Hg
Long-term stability:	< 2 % in 15 years
Gas exchange:	by diffusion
Warm up time:	approx. 1 hour
Ambient temperature:	–10…+60 °C
Response time:	approx. 1 minute
Electrical connection:	0.14 - 1.5 mm², via screw terminals
Housing:	plastic, UV-resistant, material polyamide, 30 % glass-globe reinforced, with quick-locking screws (slotted / Phillips head combination), colour traffic white (similar to RAL 9016)
Housing dimensions:	126 x 90 x 50 mm (Tyr 2)
Cable connection:	**cable gland**, plastic (M 16 x 1.5; with strain relief, exchangeable, max. inner diameter 10.4 mm) **or** **M12 connector** according to DIN EN 61076-2-101 (optional on request)
Process connection:	by screws
Protection class:	III (according to EN 60 730)
Protection type:	**IP 65** (according to EN 60 529)
Standards:	CE conformity, electromagnetic compatibility according to EN 61 326, EMC Directive 2014 / 30 / EU
Optional:	**with display** (see **AER**ASGARD® **AFTM-LQ-CO2**) for displaying the actual CO2 content in ppm
ACCESSORIES	see table

Schematic diagram **ACO2-SD**

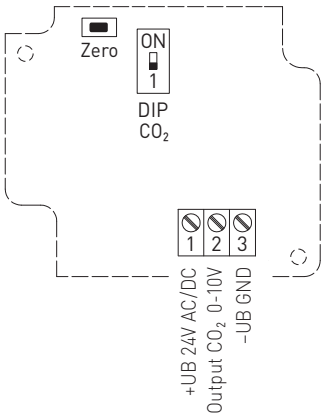

Connecting diagram **ACO2-SD**



UB+ 24V AC/DC
Output CO_2 0-10V in ppm
UB– GND

Schematic diagram **ACO2-W**

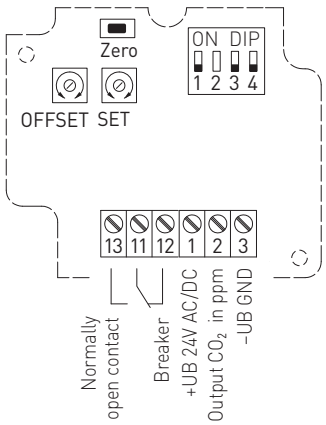

Connecting diagram **ACO2-W**



UB+ 24V AC/DC
Output CO_2 0-10V/4…20mA
UB– GND

Breaker
Normally open contact
changeover 24V/1A

S+S REGELTECHNIK

AERASGARD® ACO2-W
AERASGARD® ACO2-SD

On-wall CO2 sensor and measuring transducer, self-calibrating, with multi-range switching and active / switching output

Dimensional drawing

ACO2-W
ACO2-SD

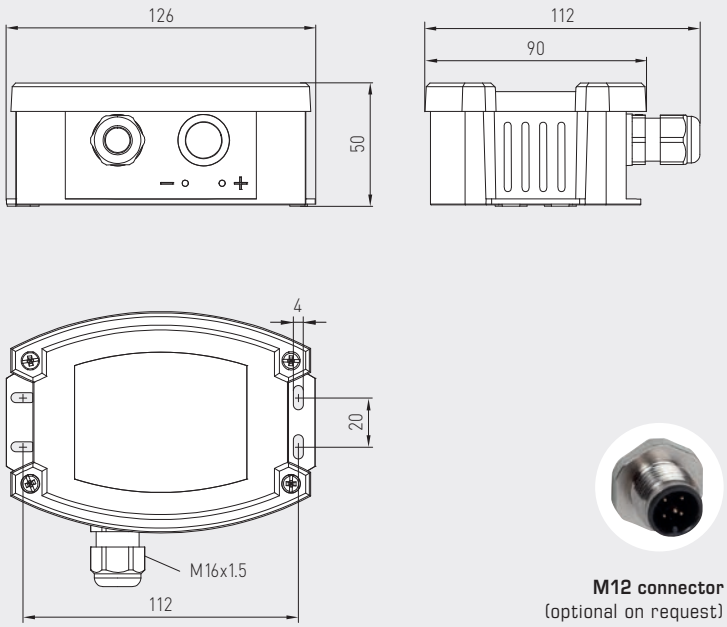

M12 connector
(optional on request)

ACO2-W
ACO2-SD



WS-03
Weather and sun protection hood
(optional)



DIP switch	ACO2-W
CO2 content	**DIP 1**
0...2000 ppm (default)	OFF
0...5000 ppm	**ON**
CO2 automatic zero point	**DIP 3**
deactivated	OFF
activated (default)	**ON**
Output	**DIP 4**
Voltage 0-10 V (default)	OFF
Current 4...20 mA	**ON**
Note: **DIP 2** is not assigned!	

DIP switch	ACO2-SD
CO2 content	**DIP 1**
0...2000 ppm (default)	OFF
0...5000 ppm	**ON**

AERASGARD® ACO2-SD On-wall CO2 sensor and measuring transducer, *Standard*
AERASGARD® ACO2-W On-wall CO2 sensor and measuring transducer, *Premium*

Type / WG02B	Measuring Range CO2	Output CO2	Equipment	Display	Item No.	Price
ACO2-SD	(switchable)	(fixed)				
ACO2-SD-U	0...2000 ppm / 0...5000 ppm	0-10 V	–		1501-7110-1001-200	**252,15 €**
ACO2-W	(switchable)	(switchable)				
ACO2-W	0...2000 ppm / 0...5000 ppm	0-10 V / 4...20 mA	changeover contact		1501-7110-7301-200	**361,77 €**
ACO2-W LCD	0...2000 ppm / 0...5000 ppm	0-10 V / 4...20 mA	changeover contact, display	■	see **AFTM-LQ-CO2**	
Optional:	Cable connection with **M12 connector** according to DIN EN 61076-2-101 (on request)					
Note:	This unit **must not** be used as safety-relevant device!					

ACCESSORIES			
WS-03	**Weather and sun protection hood**, 200 x 180 x 150 mm, stainless steel **V2A** (1.4301)	7100-0040-6000-000	**46,08 €**
	For further information see last chapter!		