TECHNICAL DATASHEET

Incremental Encoder RI 58-O / RI 58-T / RI58-C


Synchro flange

- Universal industry standard encoder
- Up to 40,000 steps with 10,000 pulses
- High signal accuracy
- Protection class up to IP67
- Flexible due to many flange and configuration variants
- Suitable for high shock ratings
- Applications: machine tools, CNC axles, packing machines, motors/ drives, injection moulding machines, sawing machines, textile machines
- For EX version, see RX70TI; for stainless steel version, see RI59
- Operating temperature up to 100 °C (RI 58-T); up to -40 °C (RI58-C)

ICURO® industry

NUMBER OF PULSES RI58-O

1 / 3 / 4 / 5 / 10 / 15 / 20 / 25 / 30 / 35 / 40 / 45 / 50 / 60 / 64 / 70 / 72 / 80 / **100** / 125 / 128 / 144 / 150 / 180 / 200 / 230 / **250** / 256 / 300 / 314 / 360 / 375 / 400 / 480 / **500** / 512 / 600 / 625 / 720 / 750 / 900 / **1000** / **1024** / 1200 / **1250** / 1500 / 1600 / 1800 / 2000 / 2048 / **2500** / 3000 / 3480 / **3600** / 3750 / 968 / 4000 / **4096** / 4800 / **5000** / 5400 / 6000 / 7200 / 7680 / 8000 / 8192 / 9000 / 10000
Other number of pulses on request
Preferably available versions are printed in bold type

NUMBER OF PULSES RI58-T

4 / 5 / 10 / 15 / 20 / 25 / 30 / 35 / 40 / 45 / 50 / 60 / 64 / 70 / 72 / 80 / **100** / 125 / 128 / 144 / 150 / 180 / 200 / 230 / **250** / 256 / 300 / 314 / 360 / 375 / 400 / 480 / **500** / 512 / 600 / 625 / 720 / 750 / 900 / **1000** / **1024** / 1200 / **1250** / 1500 / 1600 / 1800 / 2000 / 2048 / **2500**
Other number of pulses on request
Preferably available versions are printed in bold type

NUMBER OF PULSES RI58-C

3000 / 3480 / **3600** / 3750 / 968 / 4000 / **4096** / 4800 / **5000** / 5400 / 6000 / 7200 / 7680 / 8000 / 8192 / 9000 / 10000
Other number of pulses on request
Preferably available versions are printed in bold type

TECHNICAL DATA mechanical

Housing diameter	58 mm
Shaft diameter [1]	6 mm / 7 mm / 8 mm / 9.52 mm / 10 mm / 12 mm (Solid shaft)
Flange (Mounting of housing)	Synchro flange, Clamping flange, Square flange, Synchro clamping flange
Protection class shaft input (EN 60529)	IP64 or IP67
Protection class housing (EN 60529)	IP65 or IP67
Shaft load axial / radial	Ø 6 mm: 20 N / 40 N Ø 7 ... 10 mm: 40 N / 60 N Ø 12 mm: 60 N / 80 N
Max. speed [2]	max. 10.000 U/min
Starting torque typ.	≤ 0,5 Ncm ≤ 1 Ncm (IP67)
Moment of inertia	approx. 14 gcm² (Synchro flange) approx. 20 gcm² (Clamping flange)

[1] Other shaft diameters on request
[2] Higher values available upon request

Specifications subject to change without notice

Incremental Encoder RI 58-O / RI 58-T / RI58-C

TECHNICAL DATA
mechanical (continued)

Vibration resistance (DIN EN 60068-2-6)	100 m/s² (10 - 2000 Hz)
Shock resistance (DIN EN 60068-2-27)	1000 m/s² (6 ms)
Operating temperature	RI58-O: -10 °C ... +70 °C RI58-T: -40 °C ... +100 °C RI58-C: -40 °C ... +70 °C
Storage temperature [1]	-25 °C ... +85 °C
Material shaft	Stainless Steel
Material housing	Aluminum
Weight	approx. 360 g
Connection	PVC cable, axial or radial TPE cable, axial or radial M23 connector (Conin), axial or radial M16 (Binder), axial or radial M12 connector, axial or radial MS, axial or radial KPT connector radial

[1] due to packing

TECHNICAL DATA
electrical

General design	As per DIN EN 61010-1, protection class III, contamination level 2, overvoltage class II
Supply voltage [1,2]	RS422 + Sense (T): DC 5 V ±10 % RS422 + Alarm (R): ± 10% DC 5 V or DC 10 - 30 V Push-pull (K), Push-pull complementary (I): DC 10-30 V
Current w/o load typ.	40 mA (DC 5 V), 60 mA (DC 10 V), 30 mA (DC 24 V)
Max. pulse frequency	RS422: 300 kHz Push-pull: 200 kHz
Standard output versions	RS422 + Alarm (R): A, B, N, $\overline{A}$, $\overline{B}$, $\overline{N}$, $\overline{Alarm}$ RS422 + Sense (T): A, B, N, $\overline{A}$, $\overline{B}$, $\overline{N}$, Sense Push-pull (K): A, B, N, $\overline{Alarm}$ Push-pull complementary (I): A, B, N, $\overline{A}$, $\overline{B}$, $\overline{N}$, $\overline{Alarm}$
Pulse width error	± max. 25° electrical
Number of pulses	1 ... 10,000
Alarm output	NPN-O.C., max. 5 mA
Pulse shape	Square wave
Pulse duty factor	1:1

[1] Pole protection with supply voltage DC 10 - 30 V
[2] Wide range power supply DC 3 - 38 V available on request

Incremental Encoder RI 58-O / RI 58-T / RI58-C

ELECTRICAL CONNECTIONS
Cable PVC
(Connection codes A and B)

Cable PVC (A, B)	Output circuit			
Colour	**RS422 + Sense (T)**	**RS422 + Alarm (R)**	**push-pull (K)**	**push-pull complementary (I)**
white	Channel A	Channel A	Channel A	Channel A
white/brown	Channel $\overline{A}$	Channel $\overline{A}$		Channel $\overline{A}$
green	Channel B	Channel B	Channel B	Channel B
green/brown	Channel $\overline{B}$	Channel $\overline{B}$		Channel $\overline{B}$
yellow	Channel N	Channel N	Channel N	Channel N
yellow/brown	Channel $\overline{N}$	Channel $\overline{N}$		Channel $\overline{N}$
yellow/black	Sense GND	$\overline{Alarm}$	$\overline{Alarm}$	$\overline{Alarm}$
yellow/red	Sense V cc	Sense V cc		Sense V cc
red	DC 5 V	DC 5/10 - 30 V	DC 5/10 - 30 V	DC 5/10 - 30 V
black	GND	GND	GND	GND
Cable screen [1]	Cable screen [1]		Cable screen [1]	Cable screen [1]

[1] connected with encoder housing

ELECTRICAL CONNECTIONS
Cable TPE
(Connection codes E and F)

Cable TPE (E, F)	Output circuit			
Colour	**RS422 + Sense (T)**	**RS422 + Alarm (R)**	**push-pull (K)**	**push-pull complementary (I)**
brown	Channel A	Channel A	Channel A	Channel A
green	Channel $\overline{A}$	Channel $\overline{A}$		Channel $\overline{A}$
grey	Channel B	Channel B	Channel B	Channel B
pink	Channel $\overline{B}$	Channel $\overline{B}$		Channel $\overline{B}$
red	Channel N	Channel N	Channel N	Channel N
black	Channel $\overline{N}$	Channel $\overline{N}$		Channel $\overline{N}$
violet (white) [1]	Sense GND	$\overline{Alarm}$	$\overline{Alarm}$	$\overline{Alarm}$
blue	Sense V cc	Sense V cc		Sense V cc
brown/green	DC 5 V	DC 5/10 - 30 V	DC 5/10 - 30 V	DC 5/10 - 30 V
white/green	GND	GND	GND	GND
Cable screen [2]	Cable screen [2]	Cable screen [2]	Cable screen [2]	Cable screen [2]

[1] white with RS422 + Sense (T)
[2] connected with encoder housing

Incremental Encoder RI 58-O / RI 58-T / RI58-C

ELECTRICAL CONNECTIONS
M23 connector (Conin), 12 pole
(Connection codes C, D, G, H)

M12 connector, 8 pole
(Connection codes 7 and 8)

Pin-Adjustment
M23, cw

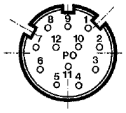

Pin-Adjustment
M23, ccw

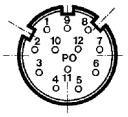

Pin M23, 12 pole	Pin M12, 8 pole	RS422 + Sense (T)	RS422 + + Alarm (R)	push-pull (K)	push-pull complementary (I)
1	6	Channel $\overline{B}$	Channel $\overline{B}$	N.C.	Channel $\overline{B}$
2		Sense V_{CC}	Sense V_{CC}	N.C.	Sense V_{CC}
3	7	Channel N	Channel N	Channel N	Channel N
4	8	Channel $\overline{N}$	Channel $\overline{N}$	N.C.	Channel $\overline{N}$
5	3	Channel A	Channel A	Channel A	Channel A
6	4	Channel $\overline{A}$	Channel $\overline{A}$	N.C.	Channel $\overline{A}$
7		N.C.	$\overline{Alarm}$	$\overline{Alarm}$	$\overline{Alarm}$
8	5	Channel B	Channel B	Channel B	Channel B
9		N.C. [1]	N.C. [1]	N.C. [1]	N.C. [1]
10	1	GND	GND	GND	GND
11		Sense GND	N.C.	N.C.	N.C.
12	2	DC 5 V	DC 5 V / 10 - 30 V	DC 10 - 30 V	DC 10 - 30 V

[1] screen for cable with CONIN connector

ELECTRICAL CONNECTIONS
KPT connector, 8 pole
(Connection code 2)

M16 connector (Binder), 6 pole
(Connection codes J and N)

Pin KPT, 8 pole	RS422 + + Alarm (R)	push-pull (K)	push-pull complementary (I)
A	Channel B	Channel B	Channel B
B	Channel $\overline{B}$		Channel $\overline{B}$
C	Channel $\overline{A}$		Channel $\overline{A}$
D	Channel A	Channel A	Channel A
E	DC 5 V / 10 - 30 V	DC 10 - 30 V	DC 10 - 30 V
F	GND	GND	GND
G	Channel N	Channel N	Channel N
H	Channel $\overline{N}$	$\overline{Alarm}$	Channel $\overline{N}$

Pin M16, 6 pole	push-pull (K)
1	DC 10 - 30 V
2	Channel A
3	Channel N
4	Channel B
5	$\overline{Alarm}$
6	GND

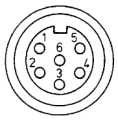

ELECTRICAL CONNECTIONS
MS connector, 10 pole, Euro-pinout
(Connection codes O and K)

MS connector, 7 pole
(Connection codes P and L)

Pin 10 pole	Pin 7 pole	Description RS422 (R)	push-pull (K)	push-pull complementary (I)
1/A	1/A	Channel A	Channel A	Channel A
2/B	2/B	Channel B	Channel B	Channel B
3/C	3/C	Channel N	Channel N	Channel N
4/D	4/D	DC 5 V / 10 - 30 V	DC 10 - 30 V	DC 10 - 30 V
5/E	5/E	$\overline{Alarm}$	$\overline{Alarm}$	$\overline{Alarm}$
6/F	6/F	GND	GND	GND
7/G		Channel $\overline{A}$	screen	Channel $\overline{A}$
8/H		Channel $\overline{B}$	N.C.	Channel $\overline{B}$
9/I		Channel $\overline{N}$	N.C.	Channel $\overline{N}$
10/J	7/G	Screen	Screen	screen

Specifications subject to change without notice

DIMENSIONED DRAWINGS

Clamping flange

Kabel/cable axial "A","E" / radial "B","F"

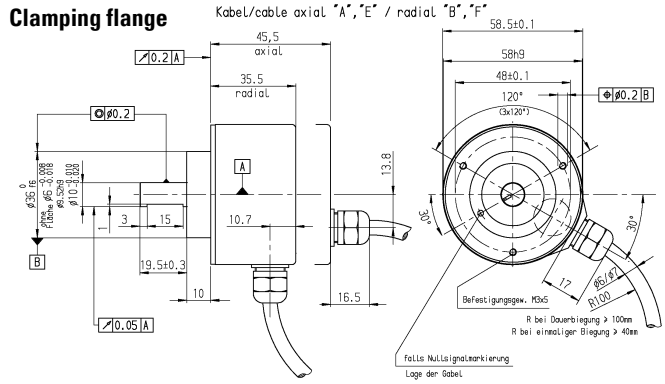

Stecker/connector M16 axial "N" / radial "J"

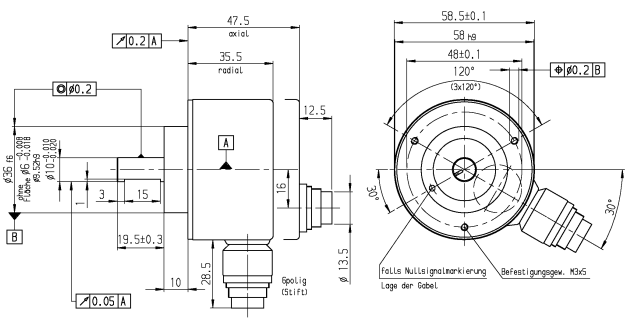

Stecker/connector M23 axial "C","G" / radial "D","H"

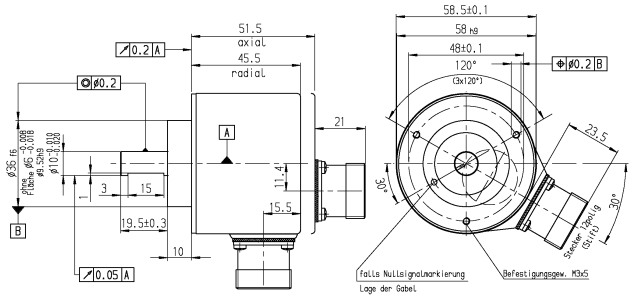

Stecker/connector M12 8pol. radial "B"

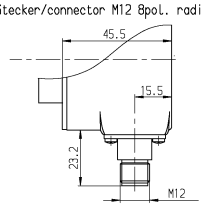

Dimensions in mm

Synchro flange

Kabel/cable axial "A","E" / radial "B","F"

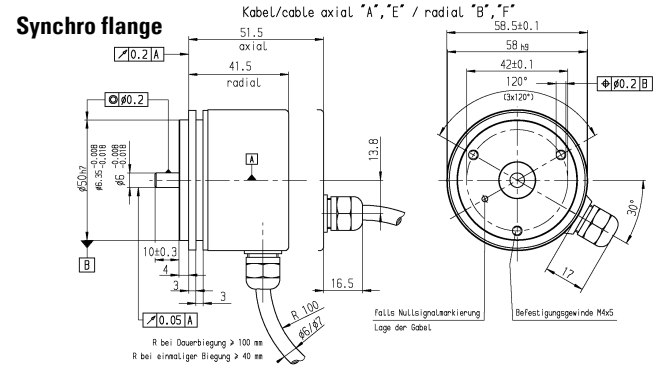

Stecker/connector M16 axial "N" / radial "J"

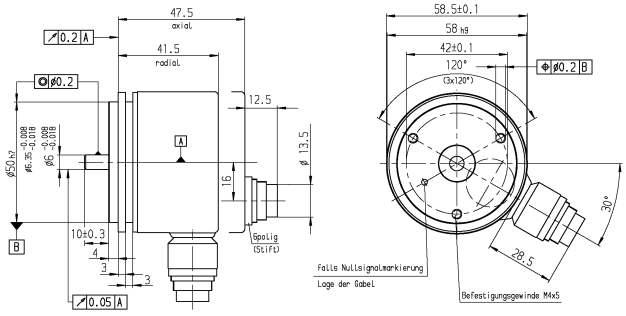

Stecker/connector M23 axial "C","G" / radial "D","H"

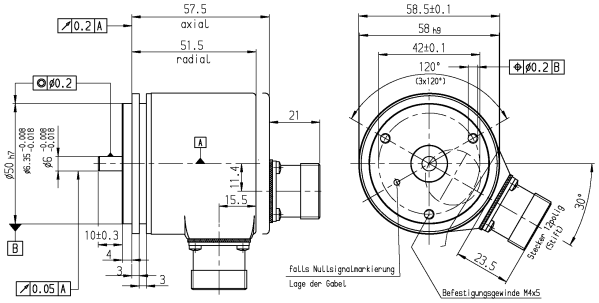

Stecker/connector M12 8pol. radial "B"

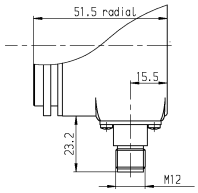

Dimensions in mm

Specifications subject to change without notice

DIMENSIONED DRAWINGS (continued)

Square flange, 63,5 mm x 63,5 mm (2,5'' x 2,5'')

Kabel/cable axial "A","E" / radial "B","F"

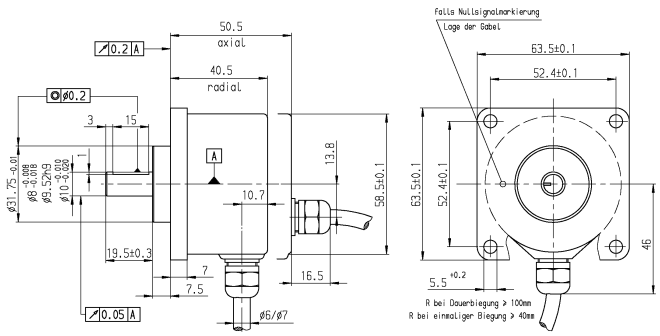

Stecker/connector M16 axial "N" / radial "J"

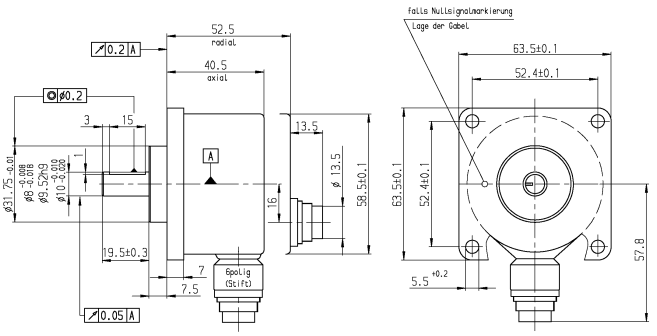

Stecker/connector M23 axial "C","G" / radial "D","H"

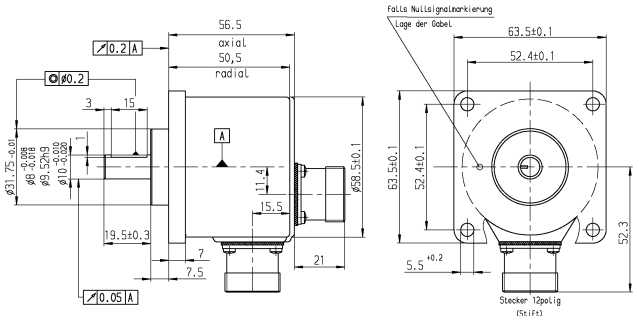

Stecker/connector M12 8pol. radial "8"

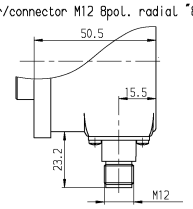

Dimensions in mm

Square flange 80 x 80 mm

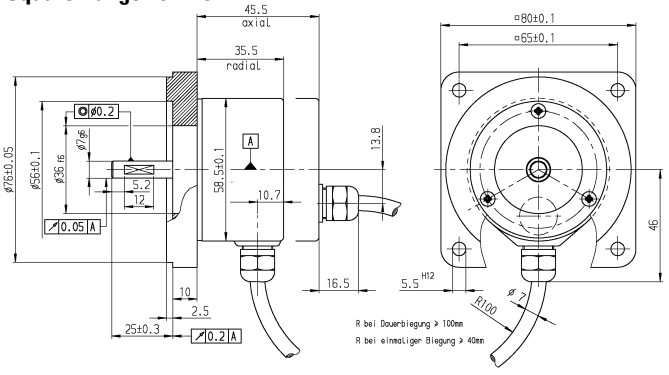

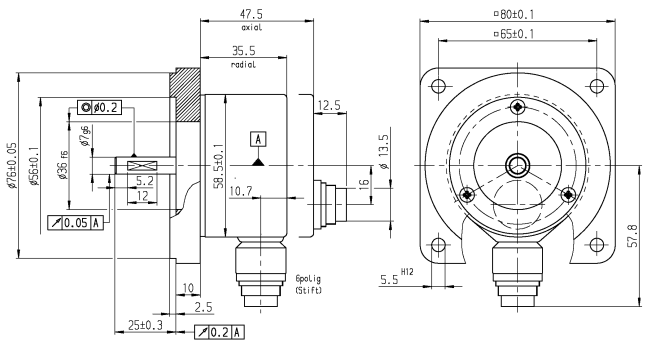

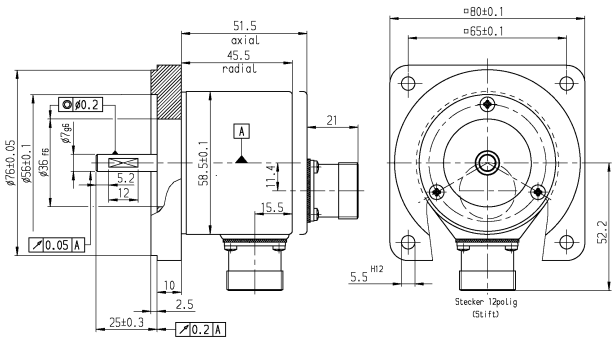

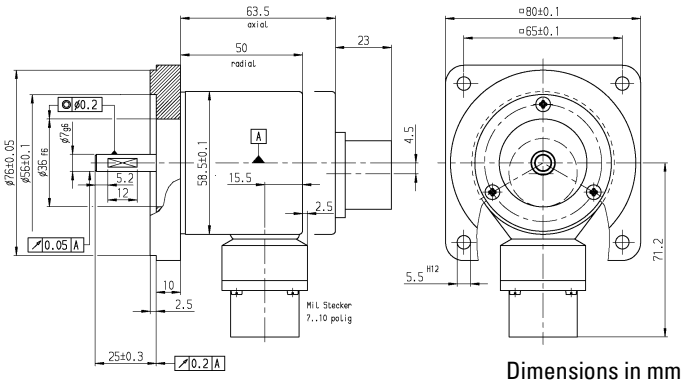

Dimensions in mm

Specifications subject to change without notice

TECHNICAL DATASHEET

Incremental Encoder RI 58-O / RI 58-T / RI58-C

ORDERING INFORMATION

Type	Number of pulses	Supply voltage[1]	Flange, Protection, Shaft [3]	Output [4]	Connection [5, 6, 8, 9]
RI58-O **RI58-T*** **RI58-C***	RI 58-O: **1 … 10000** RI 58-T: **4 … 2500** RI 58-C: **>2500 … 10000**	**A** DC 5 V **E** DC 10 - 30 V **H** DC 3 - 38 V [2]	**S.41** Synchro, IP65 [7], 6 mm **S.71** Synchro, IP67, 6 mm **K.41** Clamping M3, IP65 [7], 6 mm **K.48** Clamping M3, IP65 [7], 6x19,5 mm **L.48** Clamping M4, IP65 [7], 6x19,5 mm **K.4C** Clamping M3, IP65 [7], 8 mm **K.42** Clamping M3 IP65 [7], 10 mm **L.42** Clamping M4, IP65 [7], 10 mm **L.72** Clamping M4, IP67, 10 mm **K.47** Clamping M3, IP65 [7], 12 mm **K.43** Clamping M3, IP65 [7], 7 mm **K.46** Clamping M3, IP65 [7], 9,52 mm **K.72** Clamping M3, IP67, 10 mm **K.76** Clamping M3, IP67, 9,52 mm **M.46** Syn.clamping, IP65 [7], 9,52 mm **M.76** Syn.clamping, IP67, 9,52 mm **Q.4C** Square, IP65 [7], 8 mm **Q.46** Square, IP65 [7], 9,52 mm **Q.42** Square, IP65 [7], 10 mm **Q.76** Square, IP67, 9,52 mm **Q.72** Square, IP67, 10 mm **G.43** Square80x80, IP65 [7], 7 mm	**R** RS422 + Alarm **T** RS422 + Sense **K** Push-pull **I** Push-pull complementary	**A** PVC-cable, axial **B** PVC-cable, radial **E** TPE-cable, axial **F** TPE-cable, radial **C** M23 connector (Conin), 12 pole, axial, cw **D** M23 connector (Conin), 12 pole, radial, cw **G** M23 connector (Conin), 12-pole, axial, ccw **H** M23 connector (Conin), 12 pole, radial, ccw **7** M12 connector, 8 pole, axial **8** M12 connector, 8 pole, radial **J** M16 connector (Binder), 6 pole, radial **N** M16 connector (Binder), 6 pole, axial **O** MS connector, 10 pole (Insert arrangement 18-1), axial **K** MS connector, 10 pole (Insert arrangement 18-1), radial **P** MS connector, 7 pole (Insert arrangement 16-S), axial **L** MS connector, 7 pole (Insert arrangement 16-S), radial **2** KPT connector, 8 pole, radial

[1] DC 10 - 30 V available with output K, I, R/ DC 5 V available with output K, R, T
[2] Wide range power supply DC 3 - 38 V with output K, I, R available on request
[3] other flange versions can be realized by combination of clamping flange + flange adapter (see Accessories), e.g. RI58 with synchro flange and 10 mm-shaft: version clamping flange with 10 mm shaft + synchro flange adapter (1 522 328)
[4] Output code K and I: short-circuit-proof
[5] Connection code "O", K: according to MIL-C-5015
[6] IP67 on cover with connector only if IP67 mating connector mounted properly.
[7] Protection class shaft input (EN 60529) IP64
[8] Connection J, N, P, L not available with output R, T, I
[9] Connection 2, 7, 8 not available with output T

*RI58-T and RI58-C not available with connection code A and B

ORDERING INFORMATION
Selection of cable length

Versions with cable outlet (connection A, B, E or F) are available with various lengths of cable. To order your desired cable length, please add the respective code to the end of your ordering code. For variants with connector on cable end please add cable length code in between. Further cable lengths on request.

Code	Cable length	Code	Cable length
without Code	1,5 m	-U0	20 m
-D0	3 m	-V0	25 m
-F0	5 m	-W0	30 m
-K0	10 m	-X0	40 m
-P0	15 m	-Y0	50 m

Example: Cable 3 m length: ... B - D0
Example: Cable mit 3 m length and M23 connector, cw: ... F - D0 - I

Specifications subject to change without notice

Incremental Encoder RI 58-O / RI 58-T / RI58-C

Accessories

FLEXIBLE COUPLINGS


Bellows coupling


Disk coupling

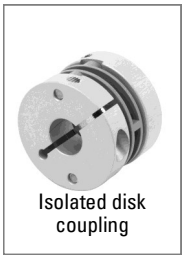
Isolated disk coupling

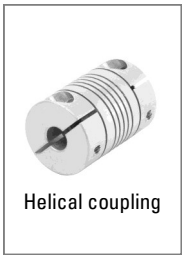
Helical coupling


Plastic coupling

	Hub diameter d1/d2	Ordering code
Bellows coupling	12 mm / 12 mm	0 070 666
Bellows coupling	10 mm / 10 mm	3 520 037
Bellows coupling	9.53 mm / 9.53 mm	3 520 038
Bellows coupling	6 mm / 6 mm	3 520 068
Bellows coupling	8 mm / 10 mm	3 520 077
Disk coupling	6 mm / 6 mm	0 070 663
Helical coupling 19/28	6 mm / 6 mm	0 070 653
Helical coupling 25/32	6 mm / 9,53 mm	3 520 052
Helical coupling 25/32	6 mm / 10 mm	3 520 066
Helical coupling 25/32	10 mm / 12 mm	3 520 065
Helical coupling 25/32	10 mm / 10 mm	3 520 074
Isolated disk coupling	6 mm / 6 mm	3 520 081
Isolated disk coupling	6 mm / 10 mm	3 520 082
Isolated disk coupling	6 mm / 9.53 mm	3 520 084
Isolated disk coupling	7 mm / 7 mm	3 520 086
Isolated disk coupling	10 mm / 10 mm	3 520 088
Plastic coupling	5 mm / 6 mm	3 520 033
Plastic coupling	6 mm / 6 mm	1 761 026
Plastic coupling	5 mm / 5 mm	3 520 034

MOUNTING

	Ordering code
Fastening angle (plastic), for clamping flange RI 58, AC 58 (fastening material included)	1 522 329
Mounting bell (plastic), for synchro flange RI 58, AC 58 (clamping eccentric and fastening material included)	1 522 330
Square flange adapter 58 x 58 mm, for clamping flange RI 58, AC 58 (fastening material included)	1 522 326
Square flange adapter 80 x 80 mm, for clamping flange RI 58, AC 58 (fastening material included	1 522 327
Synchro flange adapter , for clamping flange RI 58, AC 58 (fastening material included)	1 522 328
Clamping eccentric for synchro flange, d6,5 for M3 (set of three)	0 070 655
Clamping eccentric for synchro flange, d9 for M3 (set of three)	0 070 657
Clamping eccentric for synchro flange for M4 (set of three)	1 522 300
Spring arm for clamping flange RI58, AC58	1 522 886
Mounting bracket spring loaded	1 522 883

Incremental Encoder RI 58-O / RI 58-T / RI58-C

Accessories

CONNECTORS

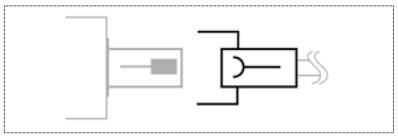

Connector (socket) matching with encoder connector	Ordering code
M16 (Binder), 6 pole, bent, IP40, mating connector for connection J/N	3 539 209
M16 (Binder), 6 pole, straight, IP67, mating connector for connection J/N	3 539 472
M23 (Conin), 12 pole, PG9, cw, mating connector for connection C/D/-I	3 539 202
MS, 10 pole, mating connector for connection K/O/R/T	3 539 258
MS, 7 pole, mating connector for connection L/P	3 539 262
PT, 8 pole, mating connector for connection 1/2	3 539 333

CONNECTORS

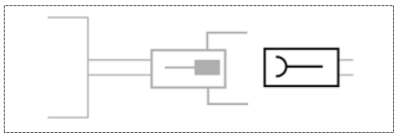

Coupling (socket) matching with encoder cable with connector	Ordering code
M23 (Conin), 12 pole, cw, mating connector for connection -C (cable plug 3 539 186)	3 539 187
M23 (VDW), 12 pole, cw, mating connector for connection -B (cable plug 3 539 252)	3 539 304

CONNECTORS

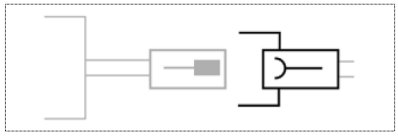

Connector (socket) matching with encoder cable with connector	Ordering code
M23 (Conin), 12 pole, ccw, mating connector for connection G/H/-D/ -H	3 539 229
M23 (VDW), 12 pole, ccw, mating connector for connection -E (cable plug 3 539 274)	3 539 305

CONNECTING CABLES

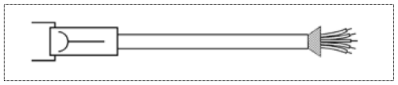

Connecting cables with plug (socket) on one end	Ordering code
M16 (Binder), 6 pole, PVC cable, mating connector for connection J/N, 3 m	1 522 405
M16 (Binder), 6 pole, PVC cable, mating connector for connection J/N, 5 m	1 522 404
M16 (Binder), 6 pole, PVC cable, mating connector for connection J/N, 10 m	1 522 340
M16 (Binder), 6 pole, PVC cable, mating connector for connection J/N, 15 m	1 522 833
M16 (Binder), 6 pole, PVC cable, mating connector for connection J/N, 50 m	1 522 836
M23 (Conin), 12 pole, TPE cable, cw, mating connector for connection C/D/-I, 3 m	1 522 348
M23 (Conin), 12 pole, TPE cable, cw, mating connector for connection C/D/-I, 5 m	1 522 349
M23 (Conin), 12 pole, TPE cable, cw, mating connector for connection C/D/-I, 10 m	1 522 350
M23 (Conin), 12 pole, TPE cable, cw, mating connector for connection C/D/-I, 15 m	1 522 454
M23 (Conin), 12 pole, TPE cable, cw, mating connector for connection C/D/-I, 20 m	1 522 456
M23 (Conin), 12 pole, TPE cable, cw, mating connector for connection C/D/-I, 25 m	1 522 457
M23 (Conin), 12 pole, TPE cable, cw, mating connector for connection C/D/-I, 30 m	1 522 464
M23 (Conin), 12 pole, TPE cable, cw, mating connector for connection C/D/-I, 40 m	1 522 643

Specifications subject to change without notice

Incremental Encoder RI 58-O / RI 58-T / RI58-C

Accessories

CONNECTING CABLES (continued)

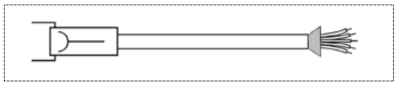

Connecting cables with plug (socket) on one end	Ordering code
M23 (Conin), 12 pole, TPE cable, cw, mating connector for connection C/D/-I, 50 m	1 522 793
M23 (Conin), 12 pole, TPE cable, ccw, mating connector for connection G/H/-D/-H, 3 m	1 522 394
M23 (Conin), 12 pole, TPE cable, ccw, mating connector for connection G/H/-D/-H, 5 m	1 522 395
M23 (Conin), 12 pole, TPE cable, ccw, mating connector for connection G/H/-D/-H, 10 m	1 522 396
M23 (Conin), 12 pole, TPE cable, ccw, mating connector for connection G/H/-D/-H, 15 m	1 522 447
M23 (Conin), 12 pole, TPE cable, ccw, mating connector for connection G/H/-D/-H, 20 m	1 522 461
M23 (Conin), 12 pole, TPE cable, ccw, mating connector for connection G/H/-D/-H, 25 m	1 522 462
M23 (Conin), 12 pole, TPE cable, ccw, mating connector for connection G/H/-D/-H, 30 m	1 522 463
M23 (Conin), 12 pole, TPE cable, ccw, mating connector for connection G/H/-D/-H, 40 m	1 522 779
MS, 10 pole, TPE cable, mating connector for connection O/K, 3 m	1 522 610
MS, 10 pole, TPE cable, mating connector for connection O/K, 5 m	1 522 754

CONNECTING CABLES

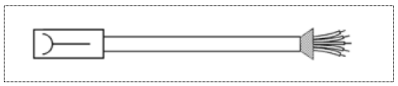

Connecting cables with coupling (socket) on one end	Ordering code
M23 (Conin), 12 pole, TPE cable, cw, mating connector for connection -C, 10 m	1 522 735
M23 (Conin), 12 pole, TPE cable, cw, mating connector for connection -C, 20 m	1 522 621

CONNECTING CABLES

Cable not made up with connectors	Ordering code
PVC cable, 10-core + screen	3 280 114 + length
PVC cable, 6-core + screen	3 280 113 + length
TPE cable, 12-core + screen	3 280 112 + length

COUNTERS

Counters	Art.-Nr.
Multifunctional counter tico 732	www.hengstler.com
Multifunctional counter tico 772	www.hengstler.com

Incremental Encoder RI 58-O / RI 58-T / RI58-C

Accessories

MEASURING WHEELS

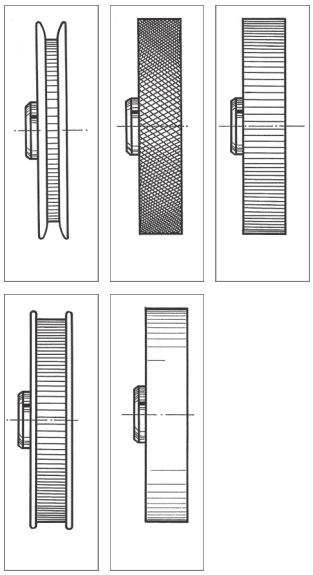

Tread 1
with rim and fine crosshatched knurl
Applications such as threads and yarns

Tread 2
with glued-on rubber profile (white), low-wear rubber surface with good grip.
Applications such as paper and cardboard, measuring cables, non-greasy metals, fleece, undressed or surface-treated wood, soft and hard plastics

Tread 3
vulcanized rubber surface with parallel knurl
Applications such as rubber, leather, fabrics, flooring and glass

Tread 4
Aluminum with parallel knurl
Applications such as rubber, soft plastics, wood with rough surface, and to a limited extent for fabrics

Tread 5
with rim, aluminum with parallel knurl
Applications such as threads, yarns and bands

Tread 6
plastic surface
Applications such as wire, greasy metals and steel sections

ORDERING INFORMATION
Aluminum

Diameter	Circum-ference	Tread	Width of bearing surface (mm)	Bore diameter (mm)	Ordering code
6,37cm	0,2 m	1	4	7 H7	0 601 017
6,37cm	0,2 m	2	12	6 H7	0 601 048
6,37cm	0,2 m	2	12	10 H7	0 601 049
6,37cm	0,2 m	2	24	7 H7	0 601 092
6,37cm	0,2 m	2	24	7 H7	0 601 192
6,37cm	0,2 m	4	20,5	7 H9	0 601 093
6,37cm	0,2 m	5	16,5	7 H7	0 601 094
15,92 cm	0,5 m	2	25	7 H7	0 601 050
15,92 cm	0,5 m	2	25	7 H7	0 601 150
15,92 cm	0,5 m	2	25	10 H7	0 601 151
15,92 cm	0,5 m	3	25	7 H7	0 601 160
15,92 cm	0,5 m	3	25	10 H7	0 601 161
15,92 cm	0,5 m	3	25	12 H7	0 601 166
15,92 cm	0,5 m	4	25	7 H7	0 601 121 [1]
15,92 cm	0,5 m	4	25	10 H7	0 601 157
15,92 cm	0,5 m	6	25	7 H7	0 601 063 [1]
15,92 cm	0,5 m	6	25	10 H7	0 601 163
15,92 cm	0,5 m	6	25	12 H7	0 601 165
9,70 cm	1 Fuß	2	25	7 H7	0 601 171

ORDERING INFORMATION
Plastic

15.92 cm	0,5 m	4	25	7 H8	0 601 301
15.92 cm	0,5 m	6	25	7 H8	0 601 300

[1] complies with PTB requirements

Specifications subject to change without notice