world leaders in the art of linear measurement

S-Series

Displacement Transducers

Datasheet
502686
issue 7
EDCR 18768

- <0.2% Linearity FSO
- 19mm Diameter Stainless Steel Body
- IP 65 or IP 67 Protection
- Improved measuring range to body length
- AC, DC, 4-20mA and Digital output versions
- Large Bore to core clearance
- Wide range of instruments & signal conditioning



The S-Series of Displacement Transducers is the culmination of many years of experience gained from Solartron Metrology' s highly successful Mach One range plus careful note of market feedback. The result is a totally new range of transducers that is better able to satisfy today ' s demanding manufacturing and research applications.

The need to transfer signals from the transducer to data acquisition and control systems reliably, quickly and cost effectively has been catered for with a complete new range of onboard or external analogue signal conditioning units and Orbit® compatible modules for Digital versions.

The Stainless Steel body with improved sealing options of IP65 or IP67, coupled with new polymer guides with rigid carriers, ensure that the transducers keep working accurately and reliably, especially in wet or corrosive conditions.

An unusually large bore to core clearance is maintained throughout the range, even on transducers fitted with onboard signal conditioning, enabling easier installation and making the assembly more forgiving of misalignment.

		S IP 65	S IP 67	SR Submersible	SR IP 68	Axial Connector	LVDT	DC	Orbit	4-20mA	Screw Mount	High Temp'
Measuring range (total travel mm)	**5**	●	●	●	●	●	●	●	●	●	●	●
	10	●	●	●	●	●	●	●	●	●	●	●
	15	●	●	●	●	●	●	●	●	●	●	●
	20	●	●	●	●	●	●	●	●	●	●	●
	30	●	●	●	●	●	●	●	●	●	●	●
	50	●	●	●	●	●	●	●	●	●	●	●
	100	●	●	●	●	●	●	●	●	●	■	●
	150	●	●	●	●	●	●	●	●	●	■	●
	200	●	●	■	■	●	●	●	●	●	■	●
	300	●	●	■	■	●	●	●	●	●	■	●
Mechanical	**Axial connector**	●	●	●	●		●	●	●	●	●	●
	Free Core	●	●	●	●	●	●	●	●	●	■	●
	Guided core	●	●	△	△	●	●	●	●	●	●	●
	Screw Mount	△	△	●	●	●	●	●	●	●		●
	High Temp,	●	■	●	●	●	●	■	●	■	●	
Display/Controller	**SI 1000**	●	●	●	●	●	●	●	●	●		
	SI 3000	●	●	●	●	●	●	●	●	●		
	SI 7000	●	●	●	●	●	■	■	●	■		
Remote signal conditioning	**DRC**	●	●	●	●	●	●					
	OD 2	●	●	●	●	●	●					
	OD 4	●	●	●	●	●	●					
	OD 5	●	●	●	●	●	●					
	BICM (15-0-15V)	●	●	●	●	●	●					
	BICM (24V)	●	●	●	●	●	●					
	TTL module	△	△	△	△	△	△					
	Orbit	●	●	●	●	●	●					

Note! High Temperature is for Transducers only

●	Compatible
△	Refer to Engineering
■	Not Available

measuring range in mm

LVDT	+/- 2.5	+/- 5.0	+/- 7.5	+/- 10	+/- 15	+/- 25	+/- 50	+/- 75	+/- 100	+/- 150
DC/DC & 4-20 mA	0-5	0-10	0-15	0-20	0-30	0-50	0-100	0-150	0-200	0-300
Digital	0-5	0-10	0-15	0-20	0-30	0-50	0-100	0-150	0-200	0-300
Linearity FSO	0.2									0.25

Electrical LVDT										
Sensitivity (mV/V/mm) ± 5%										
3V RMS at 5.0kHz into 100k ohm	145	179	121	76	60	21.5	15	10.5	6.9	3.9
Energising current (mA/V) ± 5%	1.0	2.6	2.2	0.6	1.5	0.5	0.6	2.5	1.65	1.83
Residual Voltage at null (%FSO)	<0.5	<0.5	<0.5	<0.5	<0.5	<0.5	<0.5	<0.5	<0.5	<0.5

Electrical DC/DC & 4-20mA	
Input Voltage (DC)	10-30V
Output ripple (%FSO)	0.02
Bandwidth Hz (-3dB)	500

Electrical Digital	
Reading rate	Up to 3906 readings per second
Bandwidth	Up to 460 Hz
Output	Solartron Orbit Protocol

Mechanical Options	
Guided core	see ordering guide
Spring return	
Connectors	
Extra cable	
Universal Joints	
Output options	
+/- 5 Vdc	
+/- 10 Vdc	
0-5 V dc	
5-0 V dc	
0-10 V dc	
10-0 V dc	
4-20 mA	
20-4 mA	

Environmental (transducer only)			
Storage temperature LVDT			-40ºC to +120ºC
Storage temperature DC/DC & 4-20mA			-20ºC to +85ºC
Operating temperature LVDT			-40ºC to +120ºC
Operating temperature DC/DC & 4-20mA			0ºC to +65ºC
Operating temperature Digital* (probe only)			-40ºC to +120ºC
Sealing			IP 67 or IP 65
temperature coefficient (%FSO/ºC).			
<02 for +/-2.5mm. <.015 rest of range			
Shock	Drop test 1m onto hard surface		
	topple test x 10 onto hard surface		
Vibration	Sinusoidal	Amplitude	
	10 to 50Hz	1-10 grms linear	
	50 to 1kHz	10 grms	

Material	
Body	316 series Stainless Steel
Core	Nickel/Iron
Cable	FEP

Guided with Universal Joints

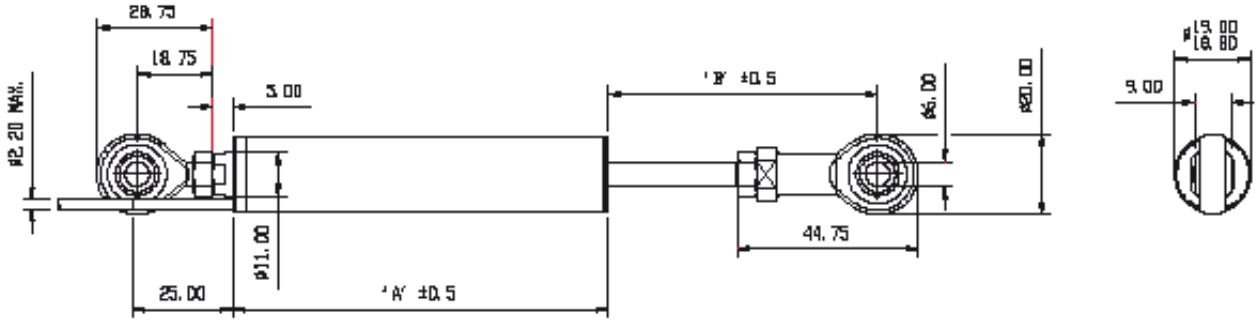

Guided with Universal Joints

A/C	'A' mm Body length	'B1' mm Fully Extended	'B2' mm At null	'B3' mm Retracted
± 2.5 mm	55	53.25	49.5	45.4
± 5 mm	74.5	64.25	57	49.4
± 7.5mm	81.7	68.25	59.9	51.2
± 10 mm	96	79.25	66.8	53.9
± 15 mm	110.4	97.25	76.3	55
± 25 mm	131.9	120.25	89.1	57.5
± 50 mm	189.5	178.25	124	69.4
± 75 mm	239.7	249.25	169.9	90.2
± 100 mm	297.2	309.23	201.18	93.08
± 150 mm	412	475	309.5	141.73

DC/DC & 4-20 mA

5 mm	94	53.25	49.5	45.4
10 mm	113.5	64.25	57	49.4
15 mm	120.7	68.25	59.9	51.2
20 mm	135	79.25	66.8	53.9
30 mm	149.4	97.25	76.3	55
50 mm	170.9	120.25	89.1	57.5
100 mm	228.5	178.25	124	69.4
150mm	278.7	249.25	169.9	90.2
200mm	336.2	309.23	201.18	93.08
300 mm	450.9	475	309.5	141.73

Free Core & Free Core with Carrier

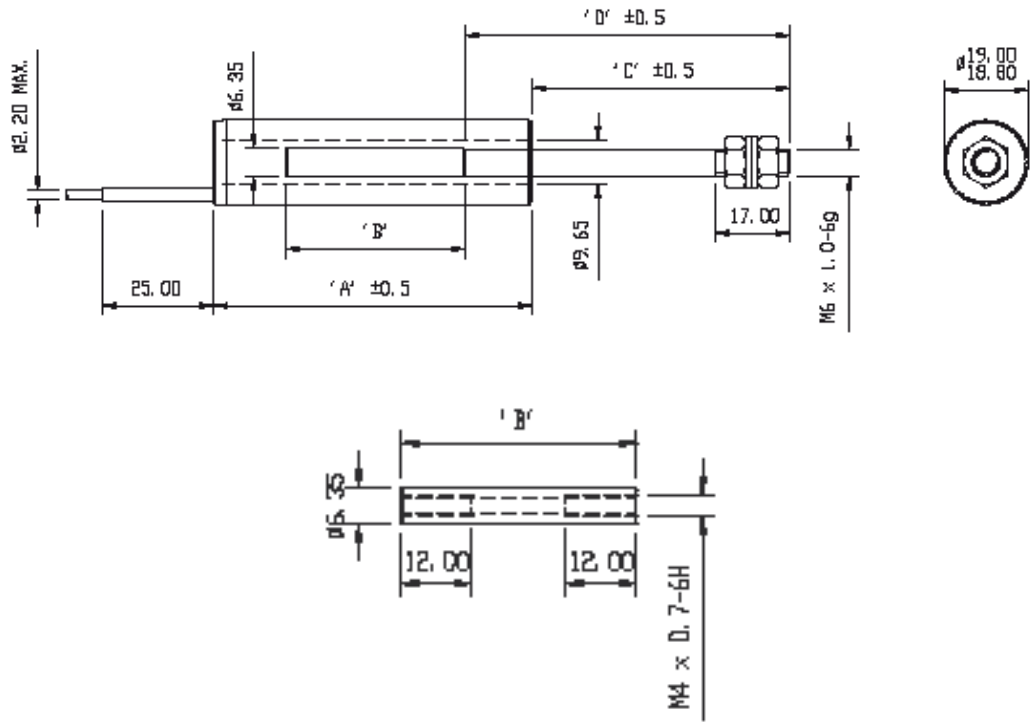

Free Core & Free Core with Carrier

A/C	'A' mm body length	'B' mm core length	'C' mm at null	D' mm
± 2.5 mm	33.5	16.5	40.5	47
± 5 mm	53	29	48	58
± 7.5mm	60.2	34	50.9	62
± 10 mm	74.5	40	57.75	73
± 15 mm	88.9	37.5	67.3	91
± 25 mm	110.4	38.5	80.05	114
± 50 mm	168	50	115	172
± 75 mm	218.2	50	160.9	243
± 100 mm	275.7	50	192.15	303
± 150 mm	390.5	50	300.72	469

DC/DC & 4-20 mA

5 mm	72.5	16.5	40.5	47
10 mm	92	29	48	58
15 mm	99.2	34	50.9	62
20 mm	113.5	40	57.75	73
30 mm	127.9	37.5	67.3	91
50 mm	149.4	38.5	80.05	114
100 mm	207	50	115	172
150mm	257.2	50	160.9	243
200mm	314.7	50	192.15	303
300 mm	429.5	50	300.72	469

Free Core & Carrier Axial Connector

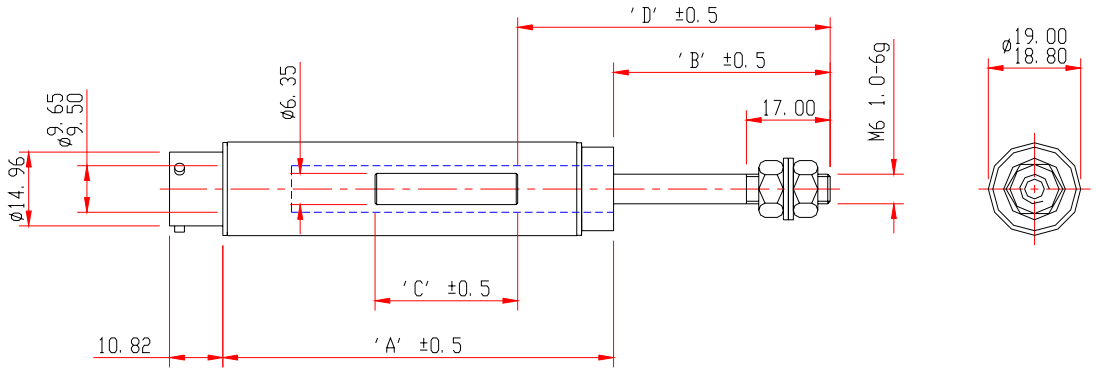

S Series Axial - Free Core & Carrirer

Transducer Type	'A' mm Body Length	'B' mm At Null	'C' mm Core Length	'D' mm
Free Core & Carrier				
AC Version				
± 2.5mm	60.40	39.10	16.50	56.50
± 5mm	79.40	46.50	29.00	67.50
± 7.5mm	86.40	49.40	34.00	71.50
± 10mm	101.40	56.30	40.00	82.50
± 15mm	116.40	65.80	37.50	100.50
± 25mm	137.40	78.60	38.50	123.50
± 50mm	194.40	113.60	50.00	181.50
± 75mm	245.40	159.50	50.00	252.50
± 100mm	301.40	190.70	50.00	312.50
± 150mm	416.40	299.30	50.00	478.50
Free Core & Carrier				
DC/DC and 4-20mA				
5mm	93.40	39.10	16.50	56.50
10mm	110.40	46.50	29.00	67.50
15mm	119.90	49.40	34.00	71.50
20mm	134.40	56.30	40.00	82.50
30mm	148.40	65.80	37.50	100.50
50mm	170.40	78.60	38.50	123.50
100mm	227.40	113.60	50.00	181.50
150mm	278.40	159.50	50.00	252.50
200mm	333.40	190.70	50.00	312.50
300mm	448.30	299.30	50.00	478.50

Guided Core & Carrier Axial Connector

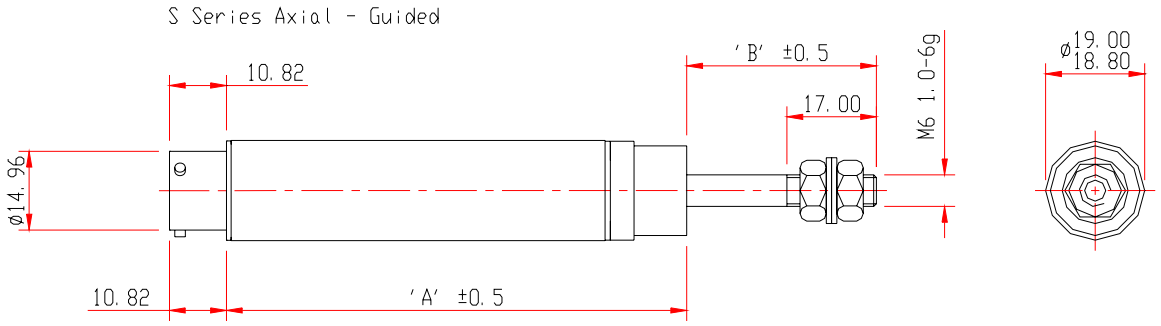

S Series Axial - Guided

Transducer Type	'A' mm Body Length	'B1' mm Extended	'B2' mm At Null	'B' mm Retracted
Guided				
AC and Digital				
± 2.5mm	68.40	40.60	32.60	27.60
± 5mm	87.40	51.00	40.00	30.50
± 7.5mm	94.40	55.00	42.90	32.40
± 10mm	109.40	66.00	49.80	35.00
± 15mm	124.40	84.00	59.30	36.10
± 25mm	145.40	107.00	72.10	38.60
± 50mm	202.40	165.00	107.10	50.70
± 75mm	253.40	236.00	153.00	71.40
± 100mm	309.40	296.00	184.20	73.90
± 150mm	424.40	462.00	292.80	125.00
Guided				
DC/DC and 4-20mA				
5mm	101.40	40.60	32.60	23.00
10mm	118.40	51.00	40.00	29.00
15mm	127.90	55.00	42.90	30.80
20mm	142.40	66.00	49.80	33.50
30mm	156.40	84.00	59.30	34.60
50mm	178.40	107.00	72.10	37.60
100mm	235.40	165.00	107.10	49.10
150mm	286.40	236.00	153.00	69.90
200mm	341.40	296.00	184.20	72.40
300mm	456.30	462.00	292.80	123.50

Also Available at Solartron Metrology



Solartron Metrology Offices

Addresses for offices worldwide

United Kingdom - Head Office
Solartron Metrology
Steyning Way
Bognor Regis
West Sussex
PO22 9ST

Tel: +44 (0) 1243 833333
Fax: +44 (0) 1243 833322
Sales.solartronmetrology@ametek.com

Germany
Ametek GmbH
Solartron Metrology Division
Rudolf-Diesel-Strasse 16
40670 Meerbusch

Tel: +49 (0) 2159 9136 500
Fax: +49 (0) 2159 9136 505
vertrieb.solartron@ametek.de

France
Solartron Metrology
Rond-point de l'Espine des Champs
Buroplus - Bat. D
Elancourt 78990

Tel: +33 (0)1 30 68 89 50
Fax: +33 (0)1 30 68 89 59
france.solartronmetrology@ametek.com

China - Shanghai
Solartron Metrology
Rm 912, Metro Tower
No 30 Tian Yao Qiao Road
Shanghai 200030
Zhong Renmin Gongheguo

Tel: +86 21 6426 8111
Fax: +86 21 6426 7054
china.solartronmetrology@ametek.com

China - Beijing
Solartron Metrology
Rm 912, Metro Tower
No 30 Tian Yao Qiao Road
Shanghai 200030

Tel: +86 21 6426 8111
Fax: +86 21 6426 7054
china.solartronmetrology@ametek.com

China - Chengdu
AMETEK ChengDu Rep Office
Room 2408, Zongfu Building
35 Zongfu Road
Chengdu, Sichun, 610016

Tel: +86 28 8675 8111
Fax: +86 28 8675 8141
china.solartronmetrology@ametek.com

Japan
Solartron Metrology
4-5-37 Kamiosaki
Shinagawa-ku
Tokyo 141-0021

Tel: +81 (0)3 3494 5131
Fax: +81 (0)3 3494 5134
japan.solartronmetrology@ametek.com

USA
915 N.New Hope Road
Suite C,
Gastonia, NC 28054

Tel: +1 800 873 5838
Fax: +1 704 868 8466
usasales.solartronmetrology@ametek.com

Agent and Distributor details available at

AMETEK
ULTRA PRECISION TECHNOLOGIES

Registered in England No. 04220056, 2 New Star Road, Leicester, LE4 9JQ

Solartron pursues a policy of continuous development. Specifications in this document may therefore be changed without notice.