ES series

Heavy-duty emergency stop

Distinctive features and specifications



New!

- ❑ **3-pole configuration now available**
- ❑ **Rugged version : 100.000 cycle mechanical life**
- ❑ **Locked/unlocked status indicator**
- ❑ **Lower behind-panel depth**
- ❑ **IP65 sealing**
- ❑ **Complies with EN 60947-5-1**

ELECTRICAL SPECIFICATIONS

- Electrical function : push-pull ON-ON
- Current/voltage rating : 1A 24VDC DC-14
- Electrical life : 6.050 cycles
- Contact resistance : 10 mΩ max.
- Insulation resistance : 1.000 MΩ min. at 500VDC
- Dielectric stength : 1.000 Vrms 50 Hz min. between terminals
  2.000 Vrms 50 Hz min. between poles and between terminals and frame

ENVIRONMENTAL SPECIFICATIONS

- Sealing : IP65
- Salt spray : 96 hours according to IEC 68-2-11
- Vibrations : 10-500 Hz - 10 g according to IEC 68-2-6
- Shock resistance : 50 g according to IEC 68-2-27
- Robustness (axial) : IK10
- Operating temperature : -40°C to +85°C
- According to EN 60947-5-1

PANEL CUT-OUT

① O-ring
② Hole

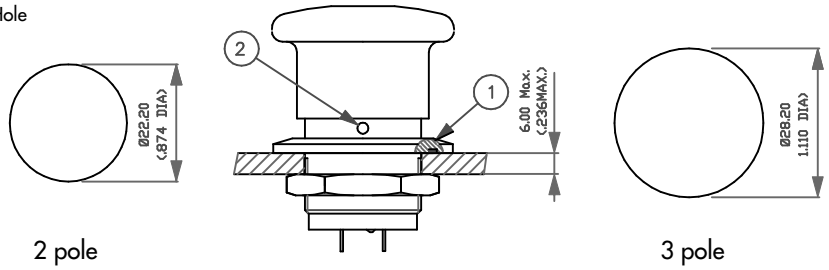

2 pole

3 pole

GENERAL SPECIFICATIONS

- Panel thickness : 6 mm (.236) max.
- Low level or mechanical life :
  100.000 cycles
- Travel to lock : 2,20 mm ± 0,3 mm
- Total travel : 4,20 mm ± 0,3 mm
- Torque : 5 Nm min. - 14 Nm max.
  applied to nut
- Operating force :
  2P: Push : 30N ± 7N - pull : 25N ± 5N
  3P: Push : 45N ± 7N - pull : 25N ± 5N

MATERIALS

- Case : diallylphthalate (DAP)
- Actuator : aluminium, red anodised
- Bushing : aluminium, yellow anodised
- Contacts : silver, gold plated
- Terminal seal : epoxy

Note : **the hole in the bushing** is designed for insertion of a Ø 2 mm metal rod helping to fasten the switch on the panel.

Dimensions : first dimensions are in mm while inches are shown as bracketed numbers.
Tolerance : The general tolerance for dimensions in this brochure is ± 0,3 (.012).
Dimensions, specifications and data shown in this brochure are subject to change without notice.

ES series

Heavy-duty emergency stop

Overview

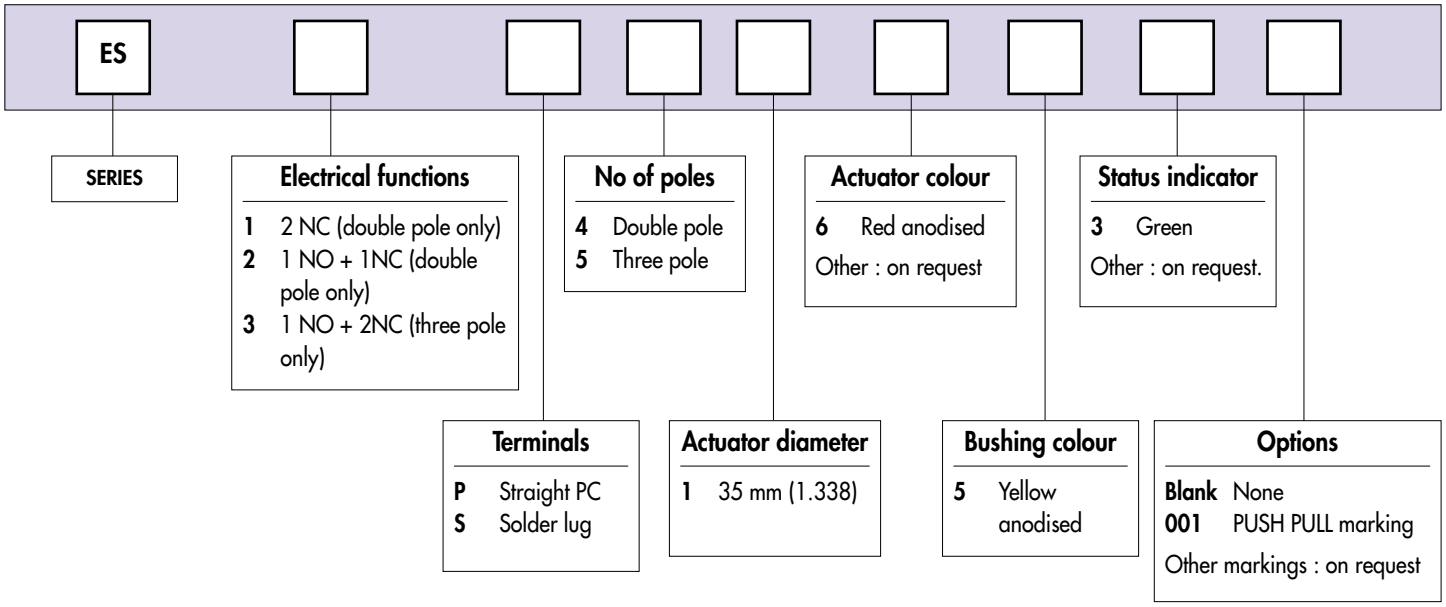

NOTICE : please note that not all combinations of above numbers are available.
Refer to the following pages for further information.

Mounting accessories : Standard hardware supplied : 1 hex nut 25 (.984) across flats and 1 O-ring

Packaging unit : 10 pieces

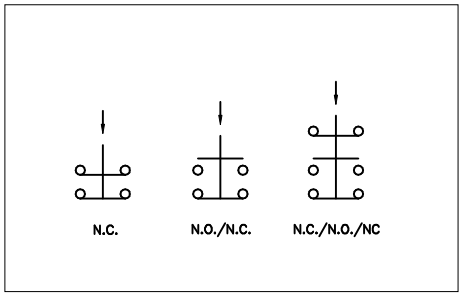

Straight PC terminal

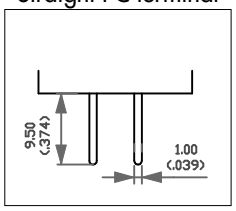

MODEL STRUCTURE

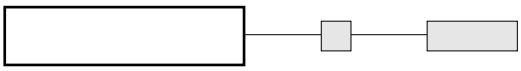

Shown with solder lug terminals

Double pole - 2 N.C. contacts



Solder lug terminals
ES1S41653

Straight PC terminals
ES1P41653

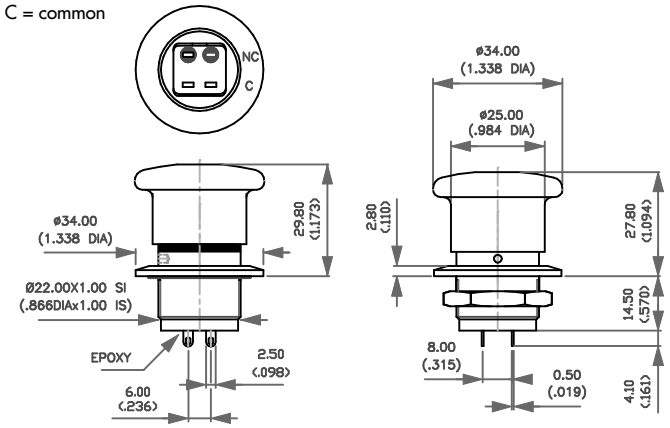

Double pole - 1 N.O. and 1 N.C. contacts



Solder lug terminals
ES2S41653

Straight PC terminals
ES2P41653

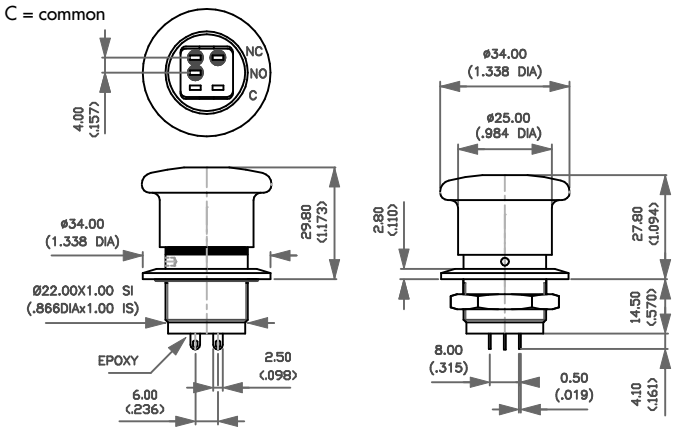

Three pole - 1 N.O. and 2 N.C. contacts



Solder lug terminals
ES3S51653

Straight PC terminals
ES3P51653

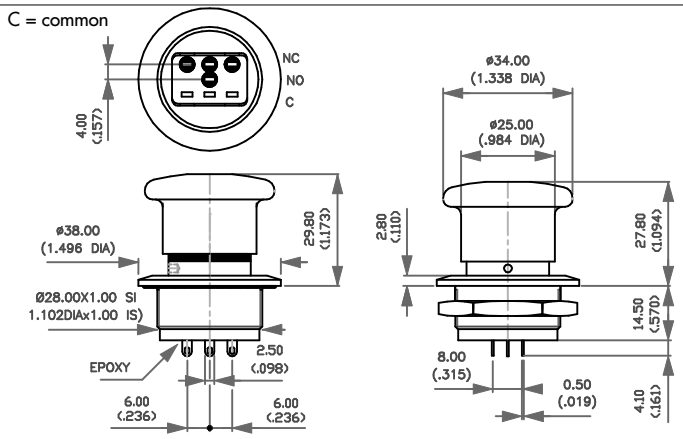

STATUS INDICATOR COLOUR

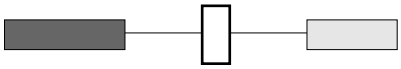

3 Green

Other : on request.

OPTIONS

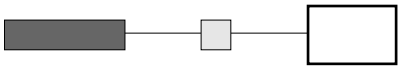

Blank None
001 PUSH PULL marking

Other markings : on request