MINI AND MICRO

M-10, M-40, M-60 & M-70 Zones 0 1 2 20 21 22

Wolf Mini and Micro torches are tough, reliable and compact enough to easily store in your pocket. Using the latest LED light source technology, light output is highly impressive, with the M-60 mini torch achieving up to 139 lumens (at source) from its 3 X LR1 cells.

UKEX, ATEX and IECEx certified for safe use in potentially explosive gas, vapour, mist or dust atmospheres where a T4 or T5 temperature class permits, all models are approved to Group I for use in mining applications.

New M-70 Zone 0/20 LED Mini Torch meets the latest harmonised dust standards for safe use in potentially explosive atmospheres. Satisfying the new rigorous testing needed to achieve the highest rated level: Zone 20, Dust Group IIIC.



LIGHT OUTPUT/DURATION/POWER

- Long life LED light sources boasting:
  - 107lm (**M-70**)
  - 139lm (**M-60**)
  - 3 x 30cd (**M-40**)
  - 30cd (**M-10**)
- Battery Duration:
  - Up to 7 hrs (**M-70**),
  - Up to 3 hrs (**M-60**),
  - Up to 10 hrs (**M-40**)
  - Up to 2 hrs (**M-10**)

CERTIFICATION

- ATEX, IECEx & UKEX explosive gas, vapour, mist and dust certified for a range of zones 0, 1, 2, 20, 21 and 22
- T4 temperature class (**M-40, M-60** & **M-70**)
- T5 temperature class (**M-10**)
- IP67 ingress protection
- Zone 0 Gas Approval
- Dust Approval: M-70 Zone 20 IIIC, M-10/40/60 Zone 21 IIIB.
- Group I Mining Approval

FEATURES

- LR03 (AAA) cells (**M-70**)
- Ultra small size – easy to store in pockets
- Lightweight, ergonomic design
- Proven impact resistance
- Single handed switching
- Switch protection shroud
- Integral pen style pocket clip
- Supplied with batteries

LIGHT OUTPUT DIAGRAM

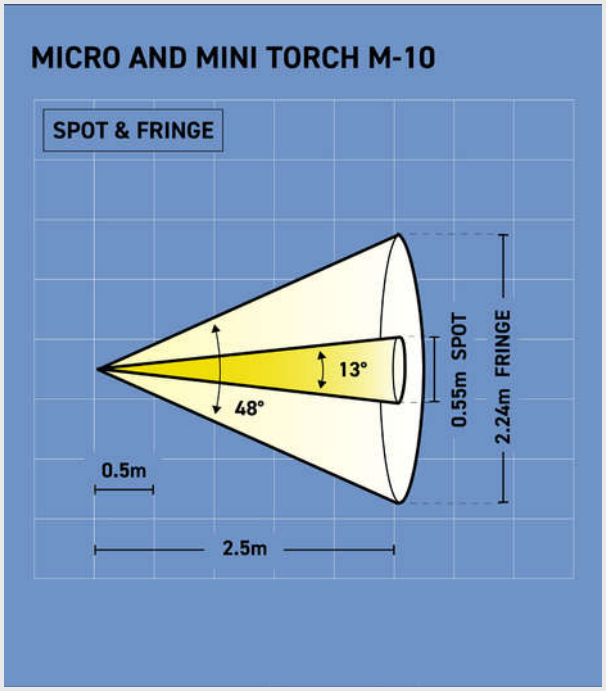

Spot Beam (approx 13°)
Peak luminous intensity at 2.5m **8 lux**

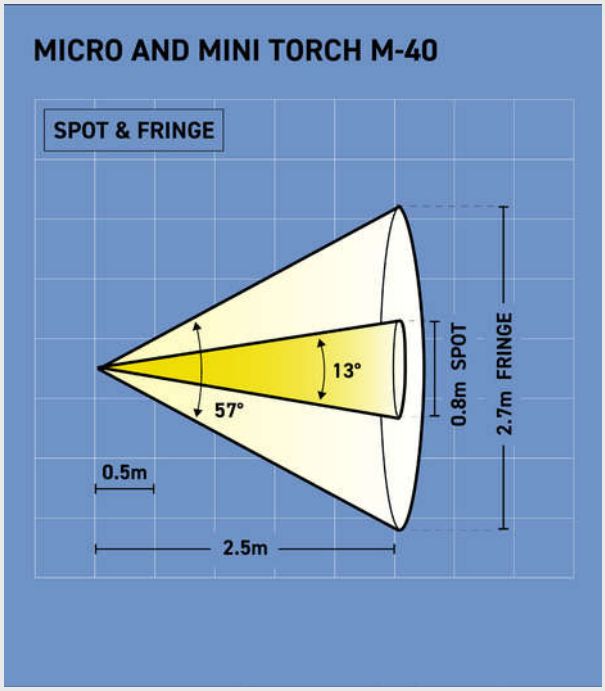

Spot Beam (approx 13°)
Peak luminous intensity at 2.5m **60 lux**

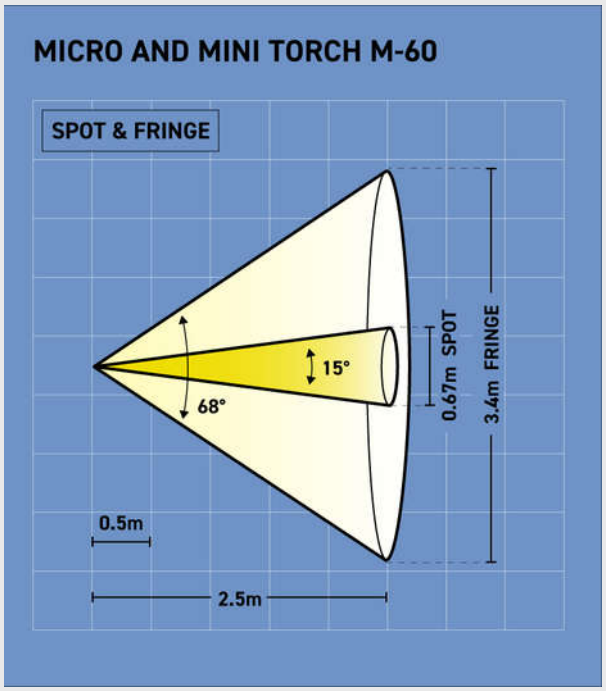

Spot Beam (approx 15°)
Peak luminous intensity at 2.5m **164 lux**

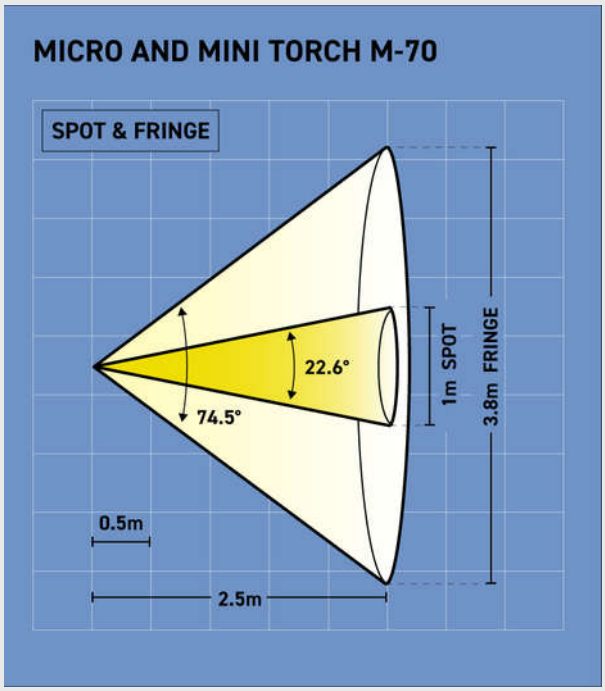

Spot Beam (approx 22.6°)
Peak luminous intensity at 2.5m **80 lux**

PRODUCT DIMEN-

M-10 MICRO TORCH

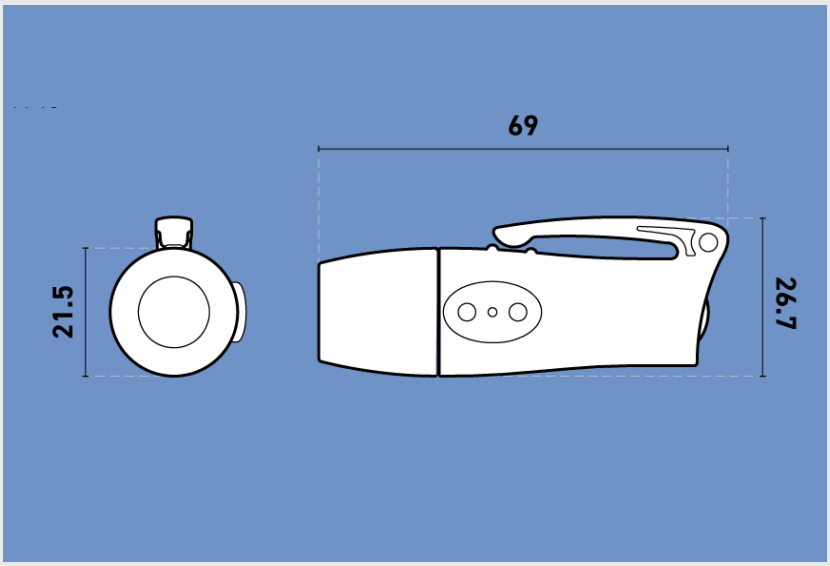

MEASUREMENT MM

PRODUCT DIMEN-

M-40, M-60, M-60MOD & M-70 MINI TORCHES

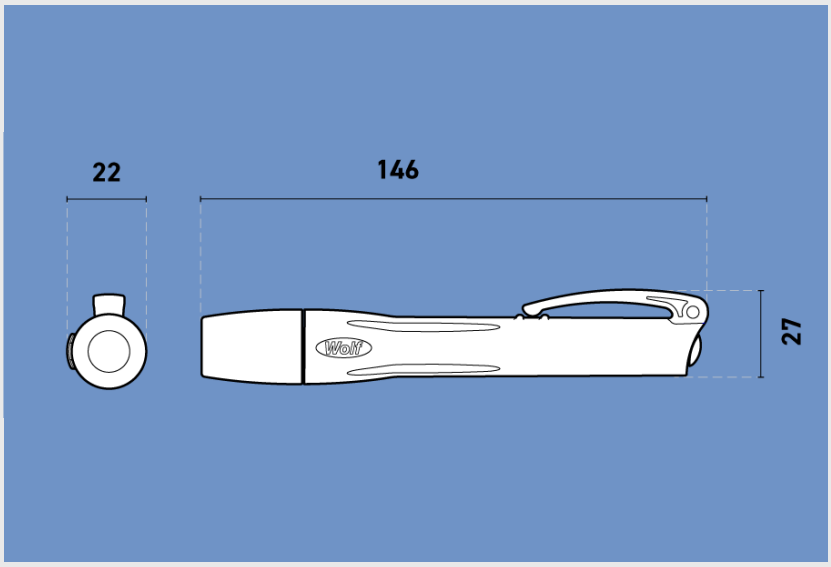

MEASUREMENT MM

MINI AND MICRO TORCHES

PRODUCT REFERENCE		M-10	M-40	M-60	M-70
PRODUCT DESCRIPTION		LED Micro Torch	LED Mini Torch		
CODE	ATEX	I M1/II 1G2D	I M1/II 1G2D	I M1/II 1G2D	I M1/II 1GD
	GAS	Ex ia IIC T5 Ga	Ex ia IIC T4 Ga	Ex ia IIC T4 Ga	Ex ia IIC T4 Ga
	DUST	Ex ib IIIB T95°C Db	Ex ib IIIB T125°C Db	Ex ib IIIB T130°C Db	Ex ia IIIC T_{200} 160°C Da
	MINING	Ex ia I Ma	Ex ia I Ma	Ex ia I Ma	Ex ia I Ma
TYPE OF PROTECTION		'ia' intrinsic safety			
AREA OF CLASSIFICATION (GAS)		Zones 0,1,2 Gas Groups IIA, IIB, IIC			
TEMPERATURE CLASS (GAS)		T5	T4		
AMBIENT TEMP.		-40°C to +50°C			-20°C to +40°C
AREA OF CLASSIFICATION (DUST)		21 & 22, Dust group IIIB	21 & 22, Dust group IIIB	21 & 22, Dust group IIIB	20, 21 & 22, Dust group IIIC
MAX. SURFACE TEMP. (DUST)		95°C	125°C	130°C	160°C
CERTIFICATE CODES		Baseefa06ATEX084 / IECEx BAS 06.0023 / BAS21UKEX0435			
ENCLOSURE / LENS		Impact Resistant Thermoplastic with a Polycarbonate Lens			
BEAM TYPE		Medium Spot			
LIGHT SOURCE	TYPE	1 x 5mm LED White (Nichia)	3 x 5mm LED White (Nichia)	1 x High Power Cree LED	
	OUTPUT (AT SOURCE)	30 cd	3 x 30 cd	up to 139 lm	up to 107 lm
	LIFE	25,000 hrs			
POWER SOURCE	PART NO.	M-102 (4 pack)	M-402 (3 pack)		M-202 (2 pack)
	TYPE	LR44 (A76) Primary Cells to IEC60086	LR1 (N) Primary Cells to IEC60086		LR03 (AAA) Primary Cells to IEC60086
	VOLTS	4 x 1.5V	3 x 1.5V		2 x 1.5V
LIGHT DURATION		Up to 2 hrs	Up to 10 hrs	3 hrs	Up to 7 hrs
INGRESS PROTECTION		IP67			
WEIGHT (INC. CELLS)		25g	60g		50g

All information has been gathered under laboratory conditions, the user must regard the values given as approximate. Changes may be made to the above specification without notification, details are available on request.

***M-60MOD** only available for MOD customers. Refer to M-60 technical spec.

Wolf Safety Lamp Company
Saxon Road Works, Sheffield S8 0YA, UK

T: +44 (0) 114 255 1051
E: info@wolfsafety.com