Current Transducer LF 306-S

I_{PN} = 300 A

For the electronic measurement of currents : DC, AC, pulsed..., with a galvanic isolation between the primary circuit (high power) and the secondary circuit (electronic circuit).

16130

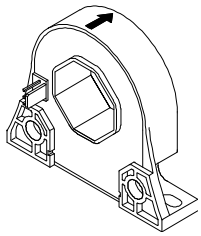

Electrical data

I_{PN}	Primary nominal r.m.s. current		300		A
I_P	Primary current, measuring range		0 .. ± 500		A
R_M	Measuring resistance		$R_{M\,min}$	$R_{M\,max}$	
	with ± 12 V	@ ± 300 A_{max}	0	37	Ω
		@ ± 500 A_{max}	0	8	Ω
	with ± 15 V	@ ± 300 A_{max}	10	56	Ω
		@ ± 500 A_{max}	10	20	Ω
I_{SN}	Secondary nominal r.m.s. current		150		mA
K_N	Conversion ratio		1 : 2000		
V_C	Supply voltage (± 5 %)		± 12 .. 15		V
I_C	Current consumption		20 (@ ±15V) + I_S		mA

Accuracy - Dynamic performance data

X_G	Overall accuracy @ I_{PN} , T_A = 25°C		± 0.4		%
ε_L	Linearity error		< 0.1		%
			Typ	Max	
I_O	Offset current @ I_P = 0, T_A = 25°C			± 0.20	mA
I_{OM}	Residual current [1] @ I_P = 0, after an overload of 3 x I_{PN}			± 0.08	mA
I_{OT}	Thermal drift of I_O	- 25°C .. + 70°C	± 0.20	± 0.64	mA
t_{ra}	Reaction time @ 10 % of $I_{P\,max}$		< 500		ns
t_r	Response time [2] @ 90 % of I_{PN}		< 1		µs
di/dt	di/dt accurately followed		> 100		A/µs
f	Frequency bandwidth (- 1 dB)		DC .. 100		kHz

General data

T_A	Ambient operating temperature		- 25 .. + 70	°C
T_S	Ambient storage temperature		- 40 .. + 90	°C
R_S	Secondary coil resistance @ T_A = 70°C		34	Ω
m	Mass		60	g
	Standards		EN 50178 : 1997	

Features

- Closed loop (compensated) current transducer using the Hall effect
- Insulated plastic case recognized according to UL 94-V0.

Advantages

- Excellent accuracy
- Very good linearity
- Low temperature drift
- Optimized response time
- Wide frequency bandwidth
- No insertion losses
- High immunity to external interference
- Current overload capability.

Applications

- AC variable speed drives and servo motor drives
- Static converters for DC motor drives
- Battery supplied applications
- Uninterruptible Power Supplies (UPS)
- Switched Mode Power Supplies (SMPS)
- Power supplies for welding applications.

Application Domain

- Industrial.

Notes : [1] The result of the coercive field of the magnetic circuit
[2] With a di/dt of 100 A/µs.

Current Transducer LF 306-S

Isolation characteristics

V_d	R.m.s. voltage for AC isolation test, 50/60 Hz, 1 mn	6	kV
$\hat{V}_w$	Impulse withstand voltage 1.2/50 µs	>7.3	kV
		Min	
dCp	Creepage distance	8	mm
dCl	Clearance distance	7.15	mm
CTI	Comparative Tracking Index (Group III a)	175	

Application examples

According to EN 50178 and IEC 61010-1 standards and following conditions :

- Over voltage category OV 3
- Pollution degree PD2
- Non-uniform field

	EN 50178	IEC 61010-1
dCp, dCl, $\hat{V}_w$	Rated isolation voltage	Nominal voltage
Single isolation	600 V	600 V
Reinforced isolation	300 V	300 V

Safety



This transducer must be used in electric/electronic equipment with respect to applicable standards and safety requirements in accordance with the manufacturer's operating instructions.



Caution, risk of electrical shock

When operating the transducer, certain parts of the module can carry hazardous voltage (eg. primary busbar, power supply).
Ignoring this warning can lead to injury and/or cause serious damage.
This transducer is a built-in device, whose conducting parts must be inaccessible after installation.
A protective housing or additional shield could be used.
Main supply must be able to be disconnected.

Dimensions LF 306-S (in mm. 1 mm = 0.0394 inch)

Front view

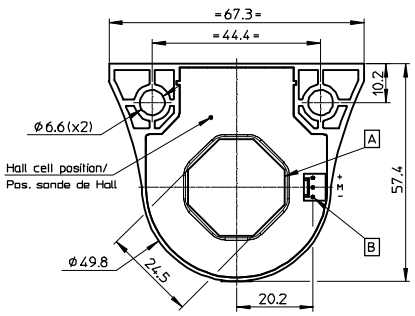

Connection

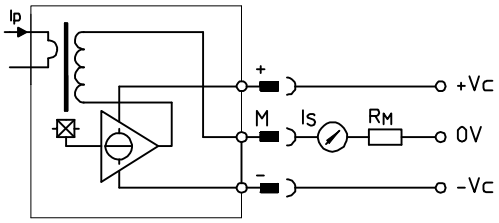

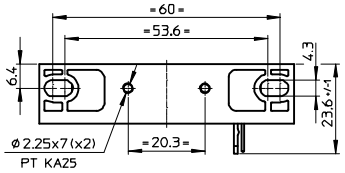

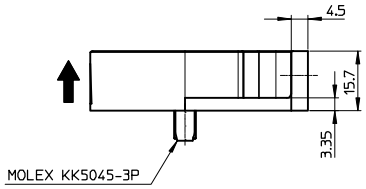

Bottom view

Right view

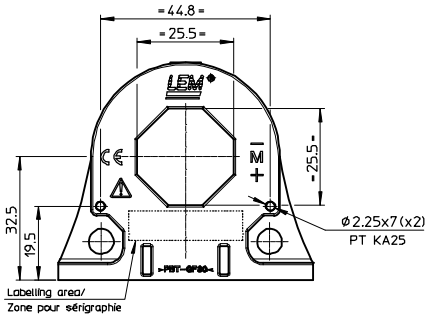

Back view

Rep.	Clearance	Creepage
A-B	7.15 mm	8.00 mm

Mechanical characteristics

• General tolerance	± 0.5 mm
• Fastening transducer	
Flat position	2 holes ∅ 6.6 mm
	2 M6 steel screws
Recommended fastening torque	4.2 Nm or 3.1 Lb.-Ft.
Or	2 holes ∅ 2.25 mm
	2 x PT KA25 screws
Recommended fastening torque	0.3 Nm or 0.22 Lb.-Ft.
Vertical position	2 holes ∅ 4.3 mm
	2 M4 steel screws
Recommended fastening torque	3 Nm or 2.21 Lb. - Ft.
Or	2 holes ∅ 2.25 mm
	2 x PT KA25 screws
Recommended fastening torque	0.3 Nm or 0.22 Lb.-Ft.
• Primary through-hole	25.5 x 25.5 mm
• Connection of secondary	Molex 5045-03/AG

Remarks

- I_S is positive when I_P flows in the direction of the arrow.
- Temperature of the primary conductor should not exceed 100°C.
- Dynamic performances (di/dt and response time) are best with a single bar completely filling the primary hole.
- This is a standard model. For different versions (supply voltages, turns ratios, unidirectional measurements...),

LEM reserves the right to carry out modifications on its transducers, in order to improve them, without previous notice.