trumeter
innovation by design

Model 3400

Electronic LCD Counter

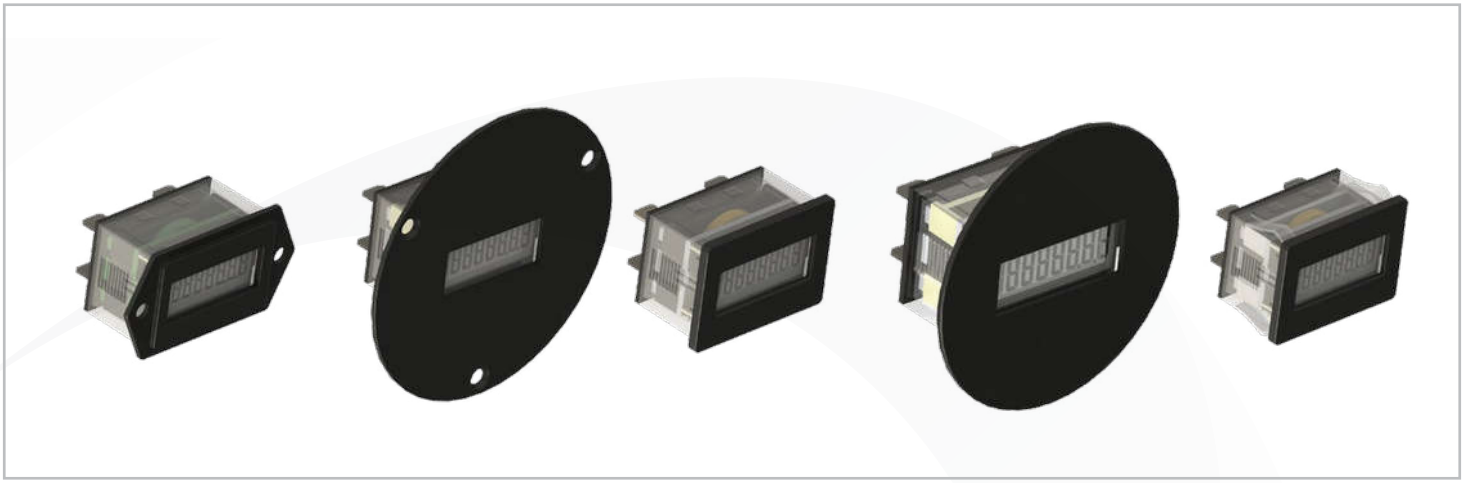

The Model 34 LCD Totalizer/Preset Counter provides a large display with 0.28” [7mm] high characters, in a range of industry-standard sized housings.

The Model 34 counts and displays the number of pulses that appear at its input terminal at a rate of 40 pulses per second (Hz), the input interface handles AC or DC inputs. The Totalizers are available in 5 different housings.

A wide operating voltage, 10-300VDC and 20-300VAC, makes the model 34 versatile for all indoor and outdoor applications. All models are NEMA 4/4X, 12 & IP66 rated when used with the optional gasket and have a polarized lens which assures high visibility in an outdoor environment.

Key Features

- Totally sealed from moisture and dirt
- AC and DC voltage input in the same unit
- Compact depth
- Fits in existing panel openings
- Always on display

Options

- Optional Remote Reset
- A choice of 5 housings

Applications

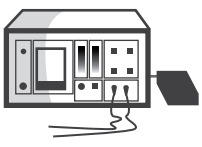

Medical Devices



Test Equipment

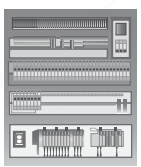

Control Panels



Production Equipment



Office Equipment



Secondary Equipment

trumeter
innovation by design

Specifications

Display	LCD with large 0.28” [7mm] high figures black on light background
Reset	Remote and non-reset.
Accuracy	100% [provided signal meets stated parameters]
Displays	8 digits (99999999)
Max pulse rate	40 pulses per second (Hz)
Inputs	10-300VDC and 20-300VAC - 50/60Hz <2mA VIH 20VAC or 10VDC minimum VIL 3VAC or 3VDC maximum
Power	Self-powered battery life 10+ years
Terminations	Standard 0.250” [6.4mm] spades
Approvals	UL & cUL recognized (file # ELIY2.E36690), CE, SAE, NEMA 4/4X/IP66 compliant (not including snap-in models)
Environmental	Temp. (Storage & Operating): -40˚F to + 185˚F [-40˚C to +85˚C] Humidity: 95% RH per SAE J1378 Shock: 44 to 55g’s per SAE J1378 Dielectric: 1000VAC 50/60 Hz for 1 minute Compliance: to European WEEE and RoHS Directives
Sealing	Totally sealed
EMC Compliance	EN61326:1997 with A1:1998 and A2:2001 for industrial environments
Enclosure	Totally sealed from moisture and dirt. NEMA 4/4X, 12 & IP66 compliant from the front when properly mounted using the optional gasket. (Not applicable in the Snap-In Model)
Weight	1 oz. [28g]

Dimensions

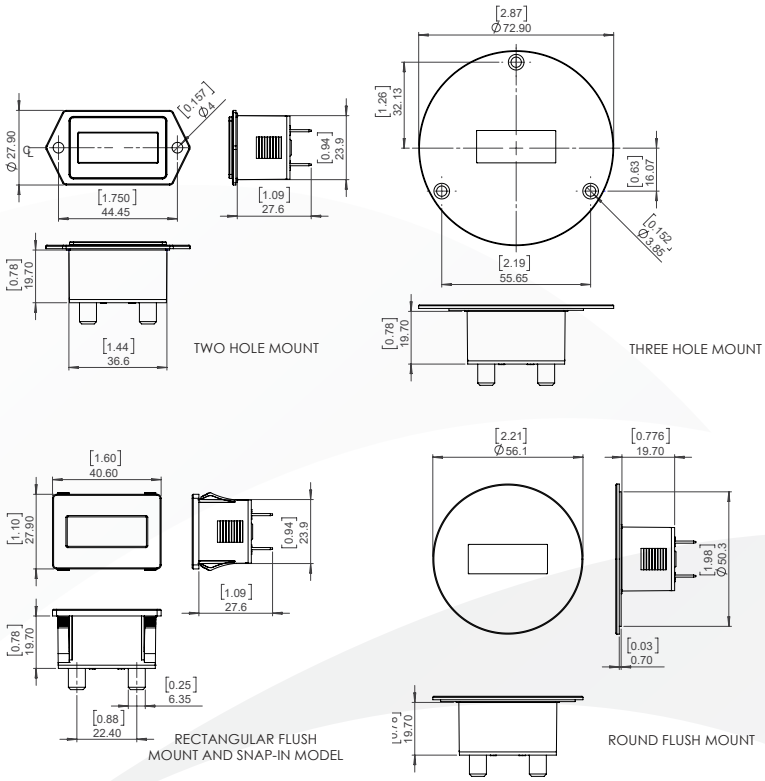

Notes: When interfacing the Model 34 with a Solid State Relay or AC sensor, the leakage current needs to be considered. Exceeding the Absolute Voltage Range and the Absolute Maximum Limits may result in damge to the unit.

Part Numbers

Part Number	Description	Gasket
3400-0000	AC/DC Counter 2-hole case 1/4” spade terminal non-reset	5003-010
3400-0010	AC/DC Counter 2-hole case 1/4” spade terminal remote-reset	5003-010
3400-1000	AC/DC Counter 3-hole case 1/4” spade terminals non-reset	5003-017
3400-1010	AC/DC Counter 3-hole case 1/4” spade terminals remote-reset ***special order** MOQ=50pcs*	5003-017
3400-2000	AC/DC Counter flush rectangular case 1/4” spade terminals non-reset ***special order** MOQ=50pcs*	
3400-2010	AC/DC Counter flush rectangular case 1/4” spade terminals remote-reset	5003-009
3400-3000	AC/DC Counter round SAE case 1/4” spade terminals non-reset **special order** MOQ=50pcs	5003-009
3400-3010	AC/DC Counter round SAE case 1/4” spade terminals remote-reset	5003-009
3400-5000	AC/DC Counter snap-in case 1/4” spade terminals non-reset	
5003-010	NEMA 4X Gasket two hole mount	
5003-017	NEMA 4X Gasket three hole mount	
5003-009	NEMA 4X Gasket flush rectangular and SAE round mount	



www.trumeter.com

Trumeter (Europe)
Pilot Mill
Alfred Street
Bury,
BL9 9EF
Tel: +44 161 674 0960
Email: sales.uk@trumeter.com

Trumeter (The Americas)
702 S. Military Trail
Deerfield Beach, Florida
FL 33442,
USA
Tel: +1 954 725 6699
Email: sales.usa@trumeter.com

Innovative Design Technologies Sdn. Bhd
Lot 5881, Lorong Iks Bukit Minyak 1
Taman Perindustrian Iks, 14000 Bukit Tengah
Penang, Malaysia
Web: www.idtworld.com
Tel: + 604 5015700
Email: sales.my@idtworld.com