Standard optical | **Sendix 5000 / 5020 (shaft / hollow shaft)** | **Push-pull / RS422 / Open collector**



Due to their sturdy bearing construction in Safety-Lock™ Design, the Sendix 5000 and 5020 offer high resistance against vibration and installation errors.

The rugged housing, high protection level of up to IP67, as well as the wide temperature range of -40 °C up to +85 °C, make this product range the perfect encoder for all applications.

24one delivery promise

24one

Safety-Lock™ | High rotational speed | Temperature range | High protection level | High shaft load capacity | Shock / vibration resistant | Magnetic field proof | Short-circuit proof | Reverse polarity protection | Optical sensor

Robust performance

- Increased resistance against shock, vibrations and tolerance of installation errors, elimination of machine downtime and repairs thanks to sturdy bearing construction in "Safety-Lock™ Design".
- Ensures highest safety against field breakdowns and is thus suitable also for outside use thanks to its resistant die-cast housing and protection up to IP67.
- Undetachable clamping ring on hollow shaft encoders.
- Wide temperature range, -40 °C ... +85 °C.

Many variants

- Suitable connection variant for every specific case: cable connection with different standard lengths, M12 (5- or 8-pin), M23 (12-pin), MIL (7- or 10-pin) and Sub-D connector.
  In addition: Variants with connector fitted in the cable – for error-free electrical connection to your control.
- Reliable mounting in a wide variety of installation situations: comprehensive and proven fixing possibilities.
- Compatible with all US and European standards.
- Wide range of standard pulse ranges up to max. 5000 pulses per revolution.

Technology in detail

Robust Safety-Lock™ bearing structure



Cables with fitted connector



Undetachable clamping ring

Slotted clamping ring + slotted shaft



Tangential cable outlet



© Fritz Kübler GmbH, subject to errors and changes. 11/2021

Standard optical | **Sendix 5000 / 5020 (shaft / hollow shaft)** | **Push-pull / RS422 / Open collector**

Order code Shaft version

8.5000	.	X	X	X	X	.	XXXX
Type		ⓐ	ⓑ	ⓒ	ⓓ		ⓔ

We offer for all encoders configured with the **underlined preferential options** our free of charge 24one delivery promise.

Orders placed on working days before 9AM CET are manufactured and ready for dispatch the same day. The 24one delivery promise is limited to 20 pieces per delivery.

24one

ⓐ *Flange*

5 = synchro flange, IP66/IP67 ø 50.8 mm [2“]
6 = synchro flange, IP65 ø 50.8 mm [2“]
7 = clamping flange, IP66/IP67 ø 58 mm [2.28“]
8 = clamping flange, IP65 ø 58 mm [2.28“]
A = synchro flange, IP66/IP67 ø 58 mm [2.28“] [1]
B = synchro flange, IP65 ø 58 mm [2.28“] [1]
C = square flange, IP66/IP67 □63.5 mm [2.5“]
D = square flange, IP65 □63.5 mm [2.5“]
G = Euro flange, IP66/IP67 ø 115 mm [4.53“] [2]

1 = servo flange, IP66/IP67 ø 50.8 mm [2“] [3]
2 = servo flange, IP65 ø 50.8 mm [2“] [3]
3 = square flange, IP66/IP67 □52.3 mm [2.06“] [3]
4 = square flange, IP65 □52.3 mm [2.06“] [3]
E = servo flange, IP66/IP67 ø 63.5 mm [2.5“] [3]
F = servo flange, IP65 ø 63.5 mm [2.5“] [3]

ⓑ *Shaft (ø x L), with flat*

1 = ø 6 x 10 mm [0.24 x 0.39“]
2 = ø 1/4 x 5/8“ (6.35 x 15.875 mm)
6 = ø 8 x 15 mm [0.32 x 0.59“]
3 = ø 10 x 20 mm [0.39 x 0.79“]
4 = ø 3/8 x 5/8“(9.5 x 15.875 mm)
B = ø 11 x 33 mm [0.43 x 1.30“], with feather key shaft slot [4]
5 = ø 12 x 20 mm [0.47 x 0.79“]

7 = ø 1/4 x 7/8“ [3]
8 = ø 3/8 x 7/8“ [3]

ⓒ *Output circuit (with inverted signal) / supply voltage*

4 = RS422 / 5 V DC
1 = RS422 / 5 ... 30 V DC
2 = push-pull (7272 compatible) / 5 ... 30 V DC
5 = push-pull / 10 ... 30 V DC

3 = open collector / 5 ... 30 V DC [3]
8 = push-pull (7272 compatible), without capacitor / 5 ... 30 V DC [1] [3] [6]

ⓓ *Type of connection – cable*

1 = axial cable, 1 m [3.28‘] PVC
A = axial cable, special length PVC *)
2 = radial cable, 1 m [3.28‘] PVC
B = radial cable, special length PVC *)

Type of connection – connector

P = axial M12 connector, 5-pin [5]
R = radial M12 connector, 5-pin [5]
3 = axial M12 connector, 8-pin
4 = radial M12 connector, 8-pin
7 = axial M23 connector, 12-pin
8 = radial M23 connector, 12-pin
Y = radial MIL connector, 10-pin
W = radial MIL connector, 7-pin [5]

9 = radial MIL connector, 6-pin [3] [5]

Type of connection – connector with cable

L = radial cable with M12 connector, 8-pin, special length PVC *)
M = radial cable with M23 connector, 12-pin, special length PVC *)
N = radial cable with Sub-D connector, 9-pin, special length PVC *)

*) Available special lengths (connection types A, B, L, M, N):
0.3, 0.5, 1, 2, 3, 4, 5, 6, 8, 10, 12, 15, 20 m [0.98, 1.64, 3.28, 6.56, 9.84, 13.12, 16.40, 19.69, 26.25, 32.80, 39.37, 49.21, 65.62‘]
order code expansion .XXXX = length in dm
ex.: 8.5000.814A.1024.0030 (for cable length 3 m)

ⓔ *Pulse rate*

1, 2, 4, 5, 10, 12, 14, 20, 25, 28, 30, 32, 36, 50, 60, 64, 80, 100, 120, 125, 150, 180, 200, 240, 250, 256, 300, 342, 360, 375, 400, 500, 512, 600, 625, 720, 800, 900, 1000, 1024, 1200, 1250, 1500, 1800, 2000, 2048, 2500, 3000, 3600, 4000, 4096, 5000
(e.g. 100 pulses => 0100)

Optional on request
- other pulse rates
- Ex 2/22 (not for type of connection L, M, N) [7]
- surface protection salt spray

Salt spray tested as standard type (deliverable as from 1 unit)
8.5000.73X4.XXXX-C

1) 24one type only in conjunction with shaft type 1.
2) Only in conjunction with shaft type B.
3) US version.
4) Only in conjunction with flange type G.
5) Without inverted signal.
6) Attention: no CE types!
7) For the cable connection type, cable material PUR.

© Fritz Kübler GmbH, subject to errors and changes. 11/2021

Incremental encoders

Standard optical	Sendix 5000 / 5020 (shaft / hollow shaft)	Push-pull / RS422 / Open collector

Order code Hollow shaft

8.5020	.	X	X	X	X	.	XXXX
Type		a	b	c	d		e

We offer for all encoders configured with the **underlined preferential options** our free of charge 24one delivery promise.

Orders placed on working days before 9AM CET are manufactured and ready for dispatch the same day. The 24one delivery promise is limited to 20 pieces per delivery.

24one

a *Flange*

1 = with spring element, long, IP66/IP67
2 = with spring element, long, IP65
3 = with torque stop, long, IP66/IP67
4 = with torque stop, long, IP65
7 = with stator coupling, IP66/IP67 ø 65 mm [2.56"]
8 = with stator coupling, IP65 ø 65 mm [2.56"]
C = with stator coupling, IP66/IP67 ø 63 mm [2.48"]
D = with stator coupling, IP65 ø 63 mm [2.48"]

5 = with stator coupling, IP66/IP67 ø 57.2 mm [2.25"] [1)]
6 = with stator coupling, IP65 ø 57.2 mm [2.25"] [1)]

b *Through hollow shaft*

1 = ø 6 mm [0.24"]
2 = ø 1/4"
9 = ø 8 mm [0.32"]
4 = ø 3/8"
3 = ø 10 mm [0.39"]
5 = ø 12 mm [0.47"]
6 = ø 1/2"
A = ø 14 mm [0.55"]
8 = ø 15 mm [0.59"]
7 = ø 5/8"

c *Output circuit (with inverted signal) / supply voltage*

4 = RS422 / 5 V DC
1 = RS422 / 5 ... 30 V DC
2 = push-pull (7272 compatible) / 5 ... 30 V DC
5 = push-pull / 10 ... 30 V DC

3 = open collector / 5 ... 30 V DC [1)]
8 = push-pull (7272 compatible), without capacitor / 5 ... 30 V DC [1) 2)]

d *Type of connection – cable*

1 = radial cable, 1 m [3.28'] PVC
A = radial cable, special length PVC *)
E = tangential cable, 1 m [3.28'] PVC
F = tangential cable, special length PVC *)

Type of connection – connector

R = radial M12 connector, 5-pin [3)]
2 = radial M12 connector, 8-pin
4 = radial M23 connector, 12-pin
6 = radial MIL connector, 7-pin
7 = radial MIL connector, 10-pin

Type of connection – connector with cable

H = tangential cable, 0.3 m [0.98'] PVC, incl. M12 connector, 8-pin for central fastening
L = tangential cable with M12 connector, 8-pin, special length PVC *)
M = tangential cable with M23 connector, 12-pin, special length PVC *)
N = tangential cable with Sub-D connector, 9-pin, special length PVC *)

*) Available special lengths (connection types A, F, L, M, N):
0.3, 0.5, 1, 2, 3, 4, 5, 6, 8, 10, 12, 15, 20 m [0.98, 1.64, 3.28, 6.56, 9.84, 13.12, 16.40, 19.69, 26.25, 32.80, 39.37, 49.21, 65.62']
order code expansion .XXXX = length in dm
ex.: 8.5020.234A.1024.0030 (for cable length 3 m)

e *Pulse rate*

1, 2, 4, 5, 10, 12, 14, 20, 25, 28, 30, 32, 36, 50, 60, 64, 80, 100, 120, 125, 150, 180, 200, 240, 250, 256, 300, 342, 360, 375, 400, 500, 512, 600, 625, 720, 800, 900, 1000, 1024, 1200, 1250, 1500, 1800, 2000, 2048, 2500, 3000, 3600, 4000, 4096, 5000
(e.g. 100 pulses => 0100)

Optional on request

- other pulse rates
- Ex 2/22 (not for type of connection E, F, H, L, M, N) [4)]
- surface protection salt spray

Salt spray tested as standard type (deliverable as from 1 unit)

8.5020.18X2.XXXX-C
8.5020.1AX2.XXXX-C

1) US version.
2) Attention: no CE types!
3) Without inverted signal.
4) For the cable connection type, cable material PUR.

© Fritz Kübler GmbH, subject to errors and changes. 11/2021

Standard optical	Sendix 5000 / 5020 (shaft / hollow shaft)	Push-pull / RS422 / Open collector

Mounting accessory for shaft encoders

		Order no.
Coupling	bellows coupling ø 19 mm [0.75“] for shaft 6 mm [0.24“]	**8.0000.1102.0606**
	bellows coupling ø 19 mm [0.75“] for shaft 10 mm [0.39“]	**8.0000.1102.1010**

Mounting accessory for hollow shaft encoders

Dimensions in mm [inch]

		Order no.
Cylindrical pin, long for flange with spring element (flange type 1 + 2)	with fixing thread 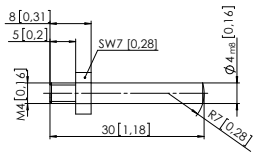	**8.0010.4700.0000**

Isolation / adapter inserts for hollow shaft encoders order code 8.5020.X8XX.XXXX



Thermal and electrical isolation of the encoders (Temperature range -40 °C ... +115 °C [-40 °F ... +239 °F])
Isolation inserts prevent currents from passing through the encoder bearings. These currents can occur when using inverter controlled three-phase or AC vector motors and considerably shorten the service life of the encoder bearings. In addition the encoder is thermally isolated as the plastic does not transfer the heat to the encoder.

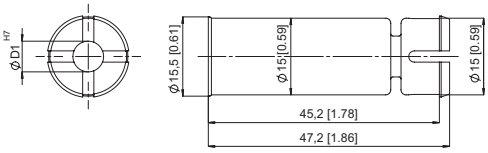

D1	Isolation insert
6 mm	**8.0010.4021.0000**
8 mm	**8.0010.4020.0000**
10 mm	**8.0010.4023.0000**
12 mm	**8.0010.4025.0000**
1/4“	**8.0010.4022.0000**
3/8“	**8.0010.4024.0000**
1/2“	**8.0010.4026.0000**

Connection technology

		Order no.
Cordset, pre-assembled	M12 female connector with coupling nut, 8-pin, A coded, straight single ended 2 m [6.56‘] PVC cable	**05.00.6041.8211.002M**
	M23 female connector with coupling nut, 12-pin, cw single ended 2 m [6.56‘] PVC cable	**8.0000.6901.0002**
Connector, self-assembly	M12 female connector with coupling nut, 8-pin, A coded, straight (metal)	**05.CMB 8181-0**
	M23 female connector with coupling nut, 12-pin, cw	**8.0000.5012.0000**
	MIL female connector with coupling nut, 10-pin	**8.0000.5062.0000**

Further Kübler accessories can be found at: kuebler.com/accessories
Further Kübler cables and connectors can be found at: kuebler.com/connection-technology

© Fritz Kübler GmbH, subject to errors and changes. 11/2021

Standard optical | **Sendix 5000 / 5020 (shaft / hollow shaft)** | **Push-pull / RS422 / Open collector**

Technical data

Mechanical characteristics

Maximum speed	IP65	12000 min^{-1} 6000 min^{-1} (continuous)
	IP66/IP67	6000 min^{-1} 3000 min^{-1} (continuous)
Mass moment of inertia		
	shaft version	approx. 1.8 x 10^{-6} kgm^2
	hollow shaft version	approx. 6 x 10^{-6} kgm^2
Starting torque at 20 °C [68 °F]	IP65	< 0.01 Nm
	IP66/IP67	< 0.05 Nm
Shaft load capacity	radial	100 N
	axial	50 N

Weight		approx. 0.4 kg [14.11 oz]
Protection acc. to EN 60529		
	without shaft seal	IP65
	with shaft seal	IP66/IP67
Working temperature range		-40 °C [1] ... +85 °C [-40 °F [1]] ... +185 °F]
Material	shaft	stainless steel
Shock resistance acc. to EN 60068-2-27		3000 m/s^2, 6 ms [2]
Vibration resistance acc. to EN 60068-2-6		300 m/s^2, 10 ... 2000 Hz [3]

Electrical characteristics

Output circuit	**RS422** (TTL compatible)	**RS422** (TTL compatible)	**Push-pull**	**Push-pull** (HTL/TTL universal, 7272 compatible)	**Push-pull** (7272 compatible, without capacitor)	**Open collector** (7273)
Order code	**1**	**4**	**5, 7**	**2**	**8**	**3**
Supply voltage	5 ... 30 V DC	5 V DC (±5 %)	10 ... 30 V DC	5 ... 30 V DC	5 ... 30 V DC	5 ... 30 V DC
Power consumption (no load)	typ. 40 mA max. 90 mA	typ. 40 mA max. 90 mA	typ. 50 mA max. 100 mA	typ. 50 mA max. 100 mA	typ. 50 mA max. 100 mA	100 mA
Permissible load / channel	max. +/- 20 mA	max. +/- 20 mA	max. +/- 20 mA	max. +/- 20 mA	max. +/- 20 mA	20 mA sink at 30 V DC
Pulse frequency	max. 300 kHz	max. 300 kHz	max. 300 kHz	max. 300 kHz [4]	max. 300 kHz	max. 300 kHz
Signal level HIGH LOW	min. 2.5 V max. 0.5 V	min. 2.5 V max. 0.5 V	min +V - 1.0 V max. 0.5 V	min. +V - 2.0 V max. 0.5 V	min. +V - 2.0 V max. 0.5 V	
Rising edge time t_r	max. 200 ns	max. 200 ns	max. 1 µs	max. 1 µs	max. 1 µs	
Falling edge time t_f	max. 200 ns	max. 200 ns	max. 1 µs	max. 1 µs	max. 1 µs	
Short circuit proof outputs [5]	yes [6]	yes [6]	yes	yes	yes [6]	yes
Reverse polarity protection of the supply voltage	yes	no	yes	no	no	no
UL approval	file no. E224618					
CE compliant acc. to	EMC guideline 2014/30/EU RoHS guideline 2011/65/EU					

1) With connector: -40 °C [-40 °F], cable fixed: -30 °C [-22 °F], cable moved: -20 °C [-4 °F].
2) For MIL connectors: 2500 m/ s^2
3) For MIL connectors: 100 m/ s^2
4) Max. recommended cable length 30 m [98.43'].
5) If supply voltage correctly applied.
6) Only one channel allowed to be shorted-out:
at +V= 5 V DC, short-circuit to channel, 0 V, or +V is permitted.
at +V= 5 ... 30 V DC, short-circuit to channel or 0 V is permitted.

© Fritz Kübler GmbH, subject to errors and changes. 11/2021

Standard optical | **Sendix 5000 / 5020 (shaft / hollow shaft)** | **Push-pull / RS422 / Open collector**

Terminal assignment

Output circuit	Type of connection	Cable (isolate unused cores individually before initial start-up)											
1, 2, 3, 4, 5, 8	5000: 1, 2, A, B	Signal:	0 V	+V	0 Vsens	+Vsens	A	$\overline{A}$	B	$\overline{B}$	0	$\overline{0}$	⏚
	5020: 1, A, E, F	Core color:	WH	BN	GY PK	RD BU	GN	YE	GY	PK	BU	RD	shield

Output circuit	Type of connection	M12 connector, 5-pin						
1, 2, 3, 4, 5, 8	5000: P, R	Signal:	0 V	+V	A	B	0	⏚
	5020: R	Pin:	1	2	3	4	5	PH [1]

Output circuit	Type of connection	M12 connector, 8-pin								
1, 2, 3, 4, 5, 8	5000: 3, 4, L	Signal:	0 V	+V	A	$\overline{A}$	B	$\overline{B}$	0	$\overline{0}$	⏚
	5020: 2, H [2], L	Pin:	1	2	3	4	5	6	7	8	PH [1]

Output circuit	Type of connection	M23 connector, 12-pin											
1, 2, 3, 4, 5, 8	5000: 7, 8, M	Signal:	0 V	+V	0 Vsens	+Vsens	A	$\overline{A}$	B	$\overline{B}$	0	$\overline{0}$	⏚
	5020: 4, M	Pin:	10	12	11	2	5	6	8	1	3	4	PH [1]

Output circuit	Type of connection	MIL connector, 10-pin										
1, 2, 3, 4, 5, 8	5000: Y	Signal:	0 V	+V	+Vsens	A	$\overline{A}$	B	$\overline{B}$	0	$\overline{0}$	⏚
	5020: 7	Pin:	F	D	E	A	G	B	H	C	I	J

Output circuit	Type of connection	MIL connector, 7-pin							
1, 3, 4, 5, 8	5000: W	Signal:	0 V	+V	+Vsens	A	B	0	⏚
	5020: 6	Pin:	F	D	E	A	B	C	G

Output circuit	Type of connection	MIL connector, 6-pin						
1, 3, 4, 5, 8	5000: 9	Signal:	0 V	+V	A	B	0	⏚
		Pin:	A	B	E	D	C	

Output circuit	Type of connection	Sub-D connector, 9-pin									
1, 2, 3, 4, 5, 8	5000: N	Signal:	0 V	+V	A	$\overline{A}$	B	$\overline{B}$	0	$\overline{0}$	⏚
	5020: N	Pin:	9	5	1	6	2	7	3	8	PH [1]

+V: Supply voltage encoder +V DC
0 V: Supply voltage encoder ground GND (0 V)
0 V_{sens} / +V_{sens}: Using the sensor outputs of the encoder, the voltage present can be measured and if necessary increased accordingly.

A, $\overline{A}$: Incremental output channel A
B, $\overline{B}$: Incremental output channel B
0, $\overline{0}$: Reference signal
PH ⏚: Plug connector housing (shield)

Top view of mating side, male contact base

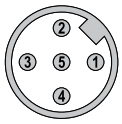

M12 connector, 5-pin

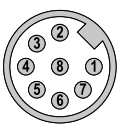

M12 connector, 8-pin

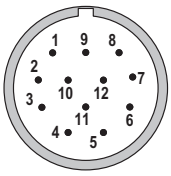

M23 connector, 12-pin

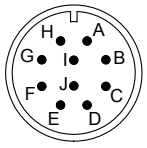

MIL connector, 10-pin

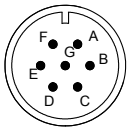

MIL connector, 7-pin

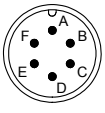

MIL connector, 6-pin

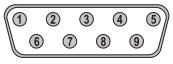

Sub-D connector, 9-pin

1) PH = shield is attached to connector housing.
2) With type of connection H shield is not attached to connector housing.

© Fritz Kübler GmbH, subject to errors and changes. 11/2021

Standard optical | **Sendix 5000 / 5020 (shaft / hollow shaft)** | **Push-pull / RS422 / Open collector**

Dimensions shaft version

Dimensions in mm [inch]

Synchro flange, ø 50.8 [2]
Flange type 5 and 6

1 3 x M3, 6 [0.24] deep

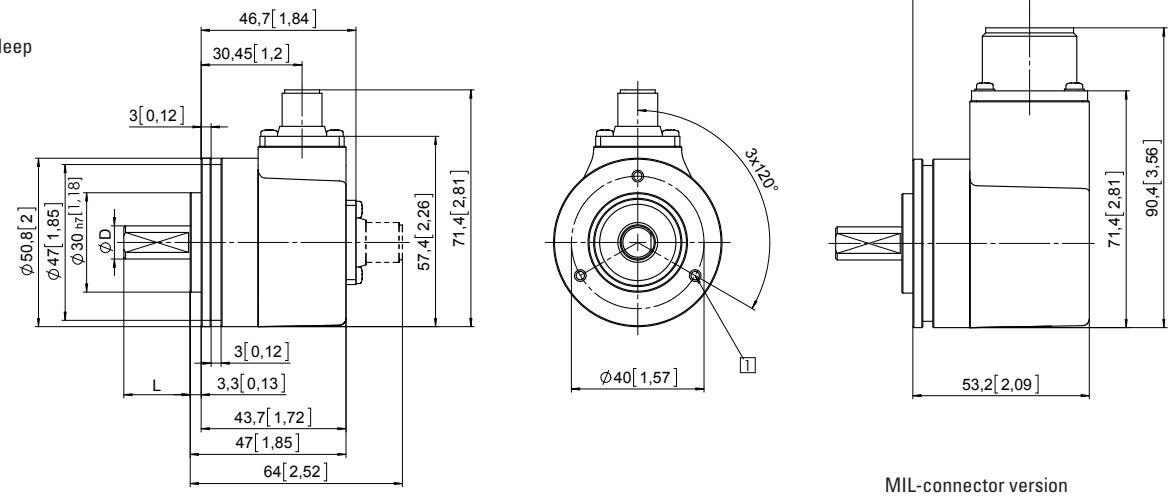

MIL-connector version

D	Fit	L
6 [0.24]	h7	10 [0.39]
8 [0.32]	h7	15 [0.59]
10 [0.39]	h7	20 [0.79]
12 [0.47]	h7	20 [0.79]
1/4"	h7	5/8"
3/8"	h7	5/8"
1/4"	h8	7/8"
3/8"	h8	7/8"

Clamping flange, ø 58 [2.28]
Flange type 7 and 8

1 3 x M3, 6 [0.24] deep

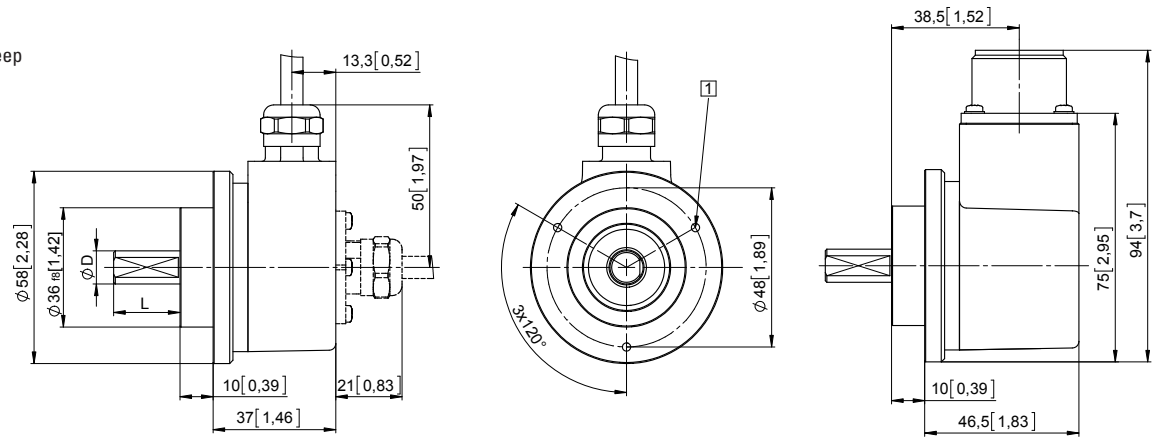

MIL-connector version

D	Fit	L
6 [0.24]	h7	10 [0.39]
8 [0.32]	h7	15 [0.59]
10 [0.39]	h7	20 [0.79]
12 [0.47]	h7	20 [0.79]
1/4"	h7	5/8"
3/8"	h7	5/8"
1/4"	h8	7/8"
3/8"	h8	7/8"

© Fritz Kübler GmbH, subject to errors and changes. 11/2021

Standard optical | **Sendix 5000 / 5020 (shaft / hollow shaft)** | **Push-pull / RS422 / Open collector**

Dimensions shaft version

Dimensions in mm [inch]

Synchro flange, ø 58 [2.28]
Flange type A and B

1 3 x M4, 6 [0.24] deep

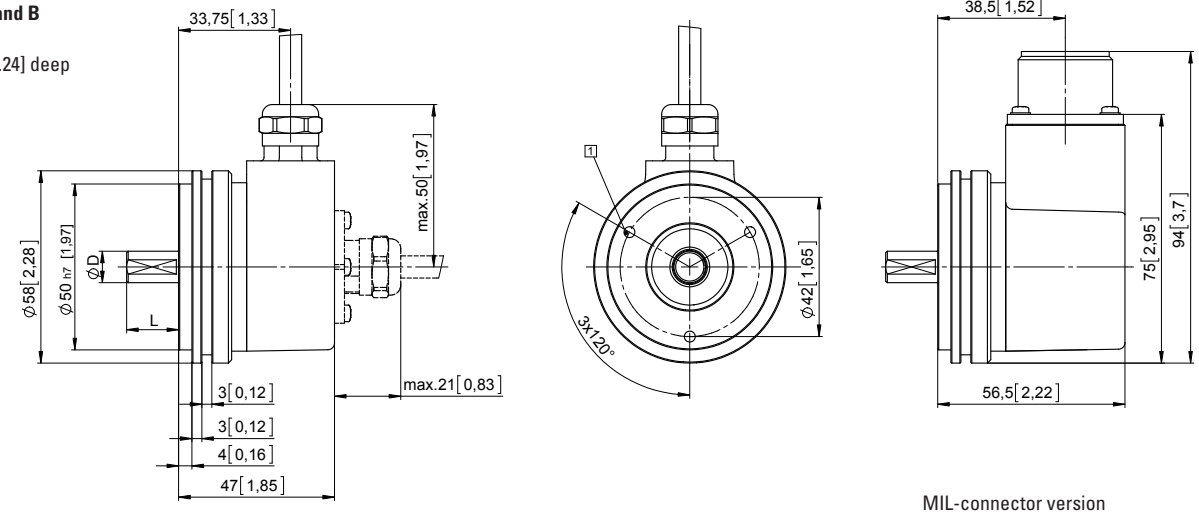

MIL-connector version

D	Fit	L
6 [0.24]	h7	10 [0.39]
8 [0.32]	h7	15 [0.59]
10 [0.39]	h7	20 [0.79]
12 [0.47]	h7	20 [0.79]
1/4“	h7	5/8“
3/8“	h7	5/8“
1/4“	h8	7/8“
3/8“	h8	7/8“

Square flange, □ 63.5 [2.5]
Flange type C and D

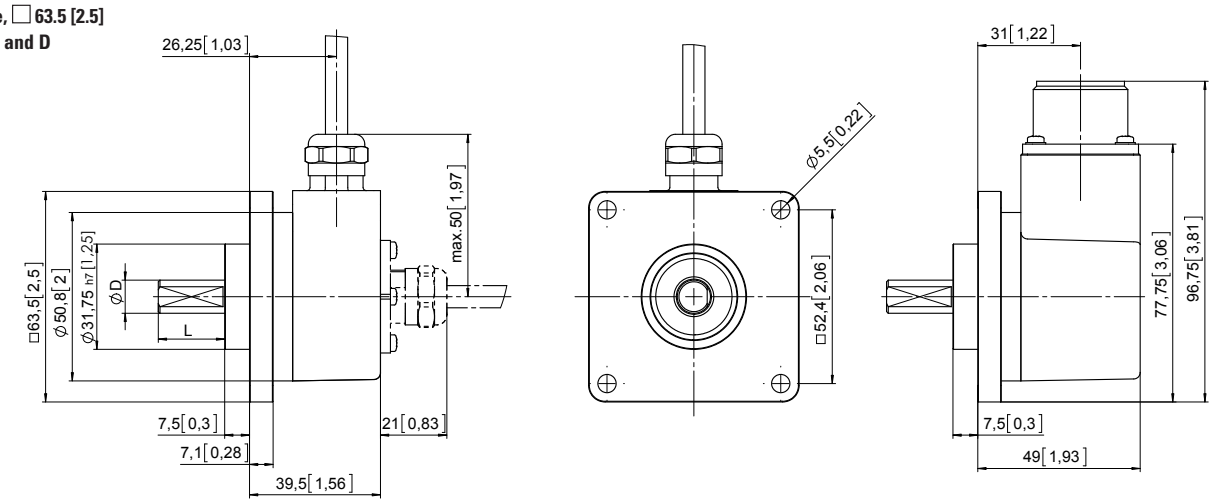

MIL-connector version

D	Fit	L
6 [0.24]	h7	10 [0.39]
8 [0.32]	h7	15 [0.59]
10 [0.39]	h7	20 [0.79]
12 [0.47]	h7	20 [0.79]
1/4“	h7	5/8“
3/8“	h7	5/8“
1/4“	h8	7/8“
3/8“	h8	7/8“

© Fritz Kübler GmbH, subject to errors and changes. 11/2021

Standard optical | **Sendix 5000 / 5020 (shaft / hollow shaft)** | **Push-pull / RS422 / Open collector**

Dimensions shaft version

Dimensions in mm [inch]

Euro flange, ø 115 [4.53]
Flange type G

1 Feather key attached

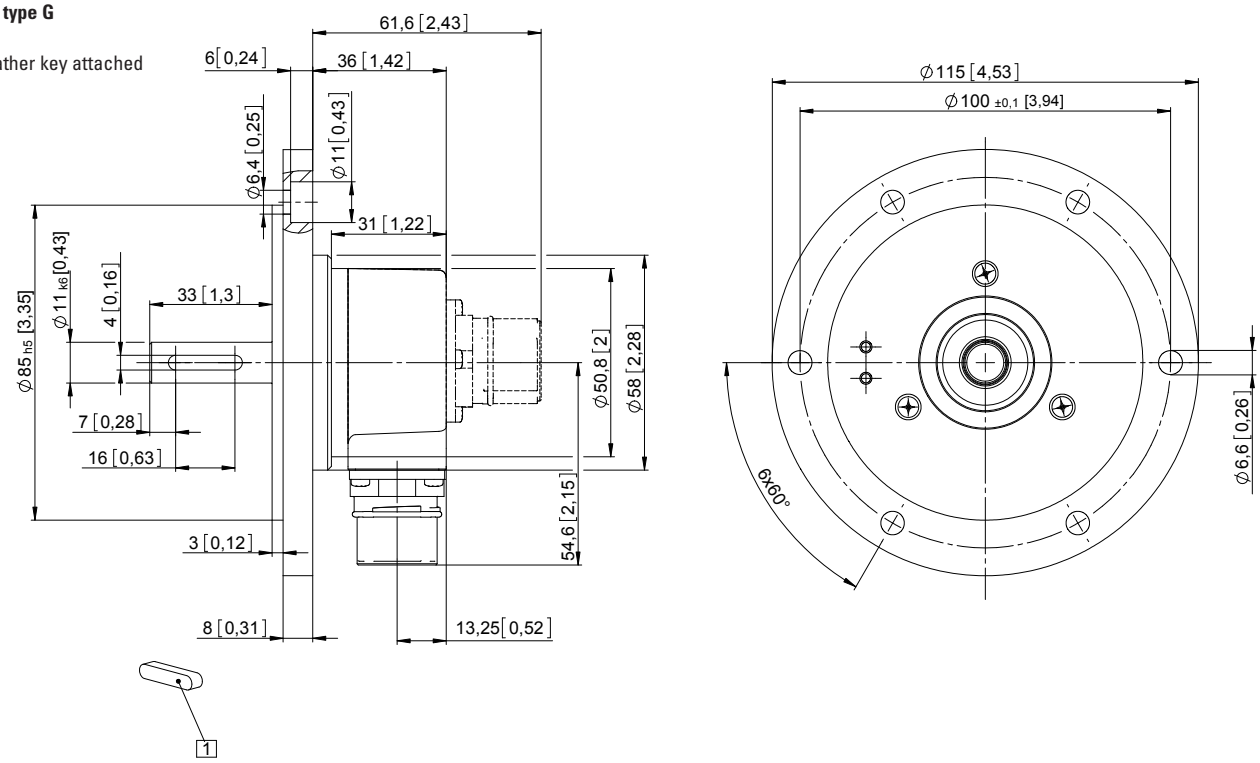

Servo flange, ø 50.8 [2]
Flange type 1 and 2

1 4-40 UNC x 6 [0.24] deep
2 6-32 UNC x 5 [0.2] deep

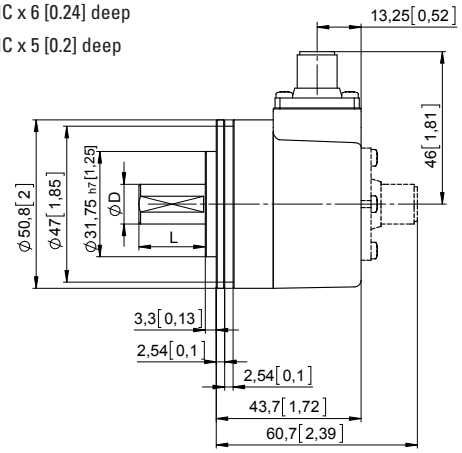

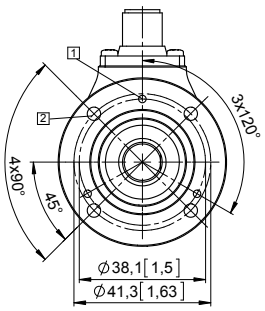

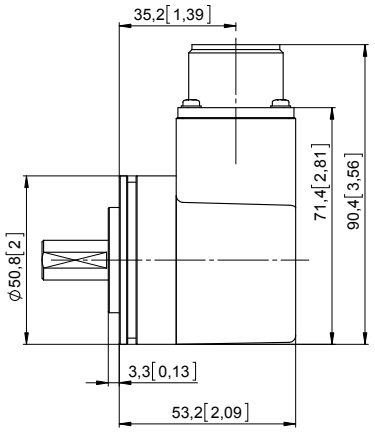

MIL-connector version

D	Fit	L
6 [0.24]	h7	10 [0.39]
8 [0.32]	h7	15 [0.59]
10 [0.39]	h7	20 [0.79]
12 [0.47]	h7	20 [0.79]
1/4"	h7	5/8"
3/8"	h7	5/8"
1/4"	h8	7/8"
3/8"	h8	7/8"

© Fritz Kübler GmbH, subject to errors and changes. 11/2021

Standard optical | **Sendix 5000 / 5020 (shaft / hollow shaft)** | **Push-pull / RS422 / Open collector**

Dimensions shaft version

Dimensions in mm [inch]

Square flange, □ 52.3 [2.06]
Flange type 3 and 4

1 ø 4 [0.16]
2 6-32 UNC x 5 [0.2] deep

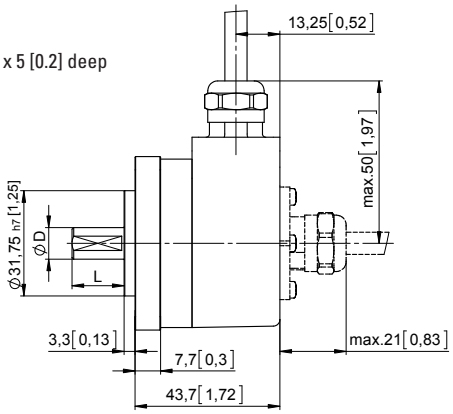

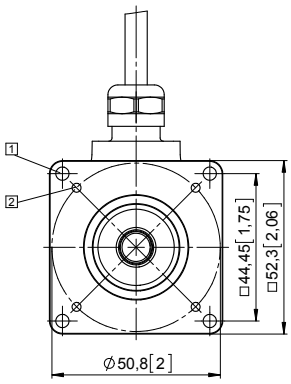

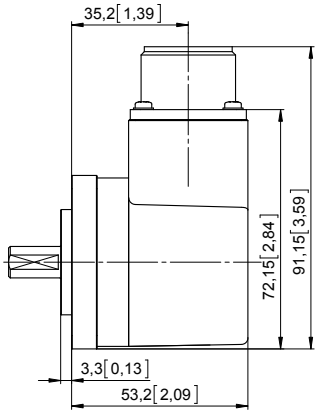

MIL-connector version

D	Fit	L
6 [0.24]	h7	10 [0.39]
8 [0.32]	h7	15 [0.59]
10 [0.39]	h7	20 [0.79]
12 [0.47]	h7	20 [0.79]
1/4"	h7	5/8"
3/8"	h7	5/8"
1/4"	h8	7/8"
3/8"	h8	7/8"

Servo flange, ø 63.5 [2.5]
Flange type E and F

1 6-32 UNC x 5 [0.2] deep

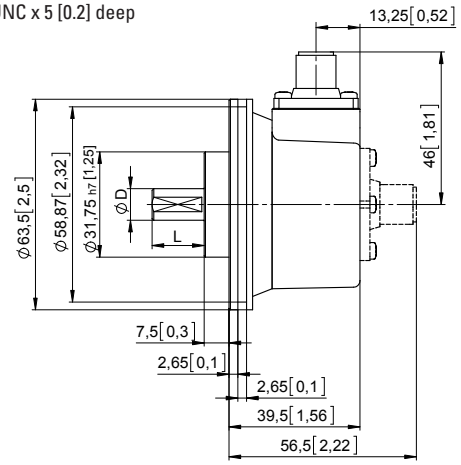

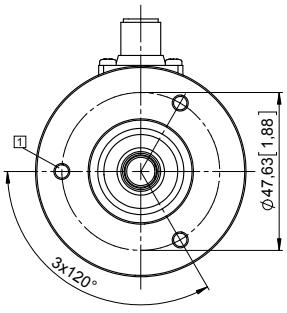

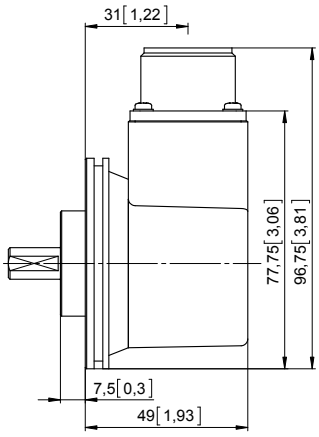

MIL-connector version

D	Fit	L
6 [0.24]	h7	10 [0.39]
8 [0.32]	h7	15 [0.59]
10 [0.39]	h7	20 [0.79]
12 [0.47]	h7	20 [0.79]
1/4"	h7	5/8"
3/8"	h7	5/8"
1/4"	h8	7/8"
3/8"	h8	7/8"

© Fritz Kübler GmbH, subject to errors and changes. 11/2021

Standard optical | **Sendix 5000 / 5020 (shaft / hollow shaft)** | **Push-pull / RS422 / Open collector**

Dimensions hollow shaft version

Dimensions in mm [inch]

Flange with spring element, long
Flange type 1 and 2

1 3 x M3, 6 [0.24] deep

2 Slot spring element, recommendation: cylindrical pin DIN 7, ø 4 [0.16]

3 Recommended torque for the clamping ring 0.6 Nm

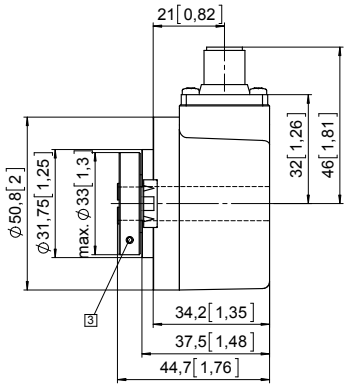

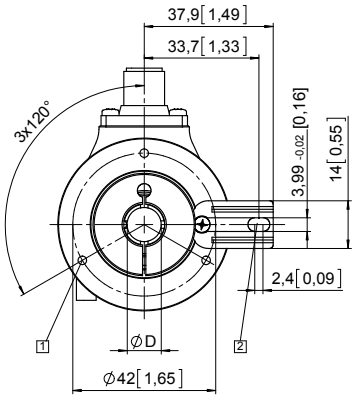

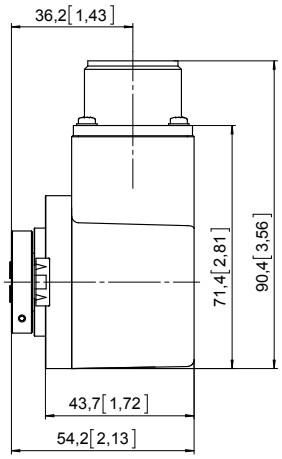

MIL-connector version

D	Fit
6 [0.24]	H7
8 [0.32]	H7
10 [0.39]	H7
12 [0.47]	H7
14 [0.55]	H7
15 [0.59]	H7
1/4"	H7
3/8"	H7
1/2"	H7
5/8"	H7
Recommended fit for shaft on customer side is g6.	

Flange with torque stop, long
Flange type 3 and 4

1 Recommended torque for the clamping ring 0.6 Nm

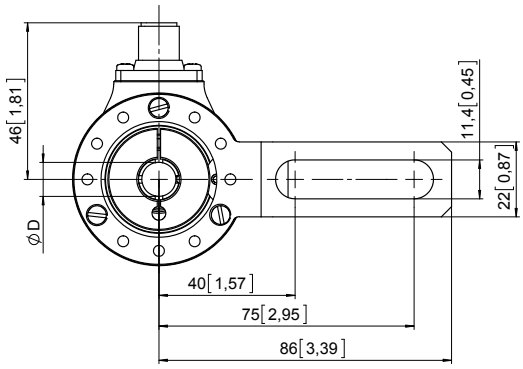

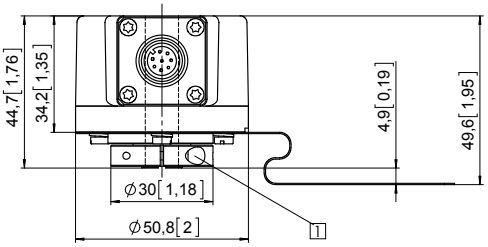

D	Fit
6 [0.24]	H7
8 [0.32]	H7
10 [0.39]	H7
12 [0.47]	H7
14 [0.55]	H7
15 [0.59]	H7
1/4"	H7
3/8"	H7
1/2"	H7
5/8"	H7
Recommended fit for shaft on customer side is g6.	

© Fritz Kübler GmbH, subject to errors and changes. 11/2021

Standard optical | **Sendix 5000 / 5020 (shaft / hollow shaft)** | **Push-pull / RS422 / Open collector**

Dimensions hollow shaft version

Dimensions in mm [inch]

Flange with stator coupling, ø 65 [2.56]
Flange type 7 and 8

1 Recommended torque for the clamping ring 0.6 Nm

D	Fit
6 [0.24]	H7
8 [0.32]	H7
10 [0.39]	H7
12 [0.47]	H7
14 [0.55]	H7
15 [0.59]	H7
1/4“	H7
3/8“	H7
1/2“	H7
5/8“	H7
Recommended fit for shaft on customer side is g6.	

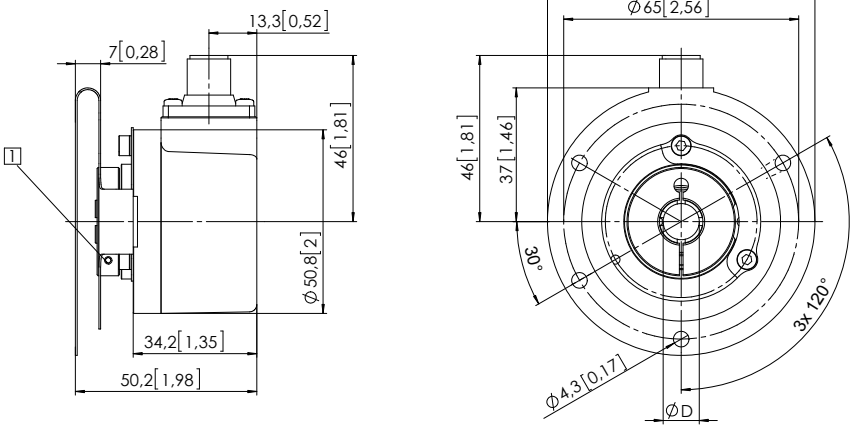

Flange with stator coupling, ø 63 [2.48]
Flange type C and D

1 Recommended torque for the clamping ring 0.6 Nm

D	Fit
6 [0.24]	H7
8 [0.32]	H7
10 [0.39]	H7
12 [0.47]	H7
14 [0.55]	H7
15 [0.59]	H7
1/4“	H7
3/8“	H7
1/2“	H7
5/8“	H7
Recommended fit for shaft on customer side is g6.	

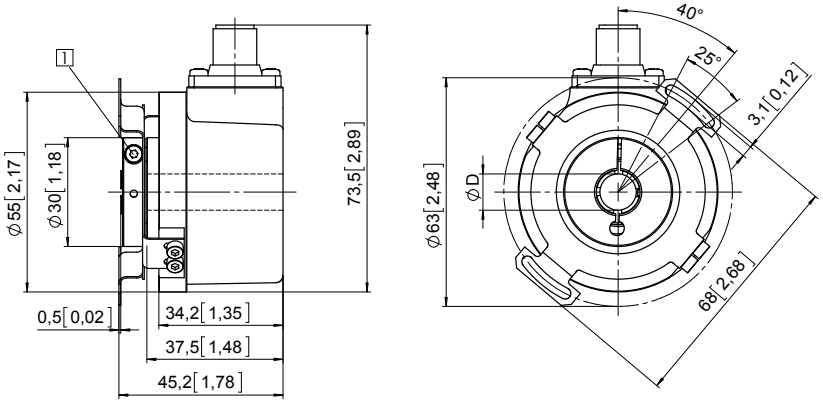

Flange with stator coupling, ø 57.2 [2.25]
Flange type 5 and 6

1 Recommended torque for the clamping ring 0.6 Nm

D	Fit
6 [0.24]	H7
8 [0.32]	H7
10 [0.39]	H7
12 [0.47]	H7
14 [0.55]	H7
15 [0.59]	H7
1/4“	H7
3/8“	H7
1/2“	H7
5/8“	H7
Recommended fit for shaft on customer side is g6.	

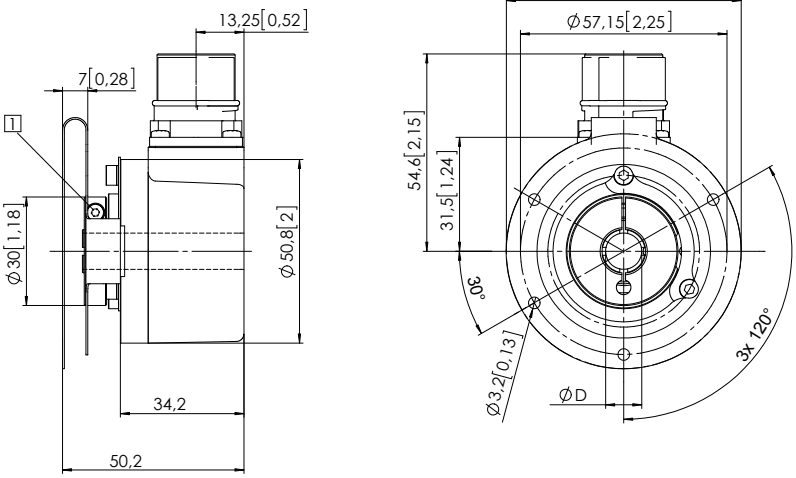

© Fritz Kübler GmbH, subject to errors and changes. 11/2021

Standard optical | **Sendix 5000 / 5020 (shaft / hollow shaft)** | **Push-pull / RS422 / Open collector**

Dimensions hollow shaft version

Dimensions in mm [inch]

Flange with spring element, long and tangential cable outlet
Type of connection E, F and H

1 3 x M3, 6 [0.24] deep

2 Slot spring element, recommendation: cylindrical pin DIN 7, ø 4 [0.16]

3 Recommended torque for the clamping ring 0.6 Nm

4 Shield is not applied on connector

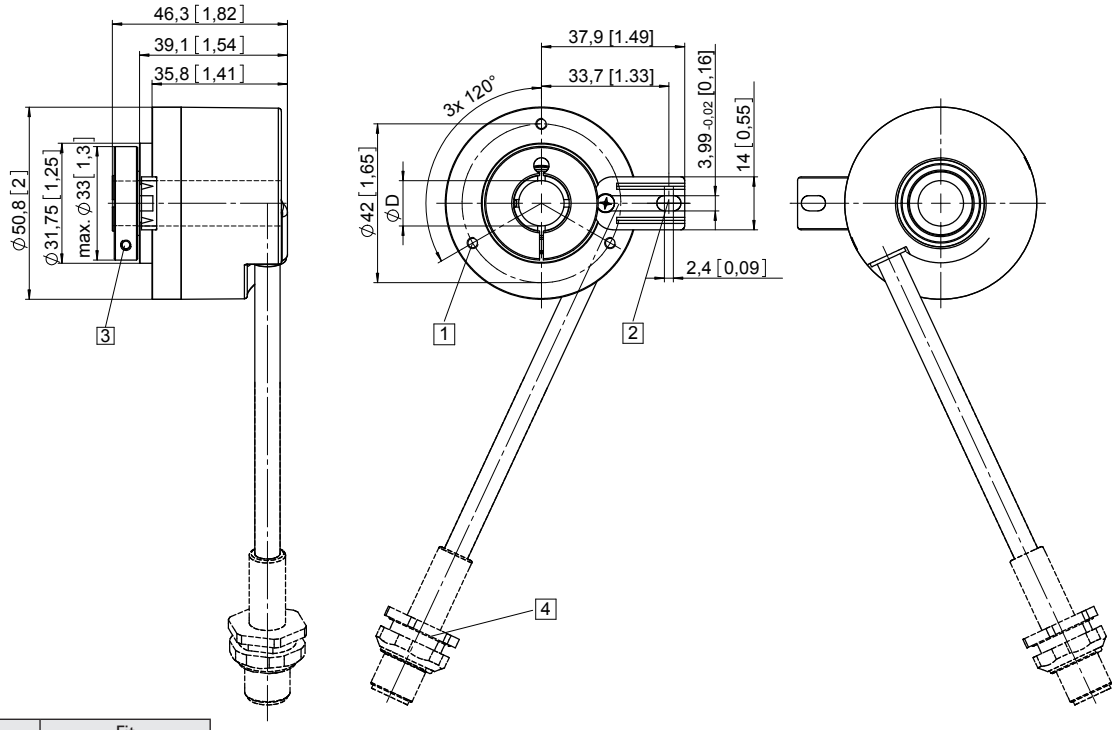

D	Fit
6 [0.24]	H7
8 [0.32]	H7
10 [0.39]	H7
12 [0.47]	H7
14 [0.55]	H7
15 [0.59]	H7
1/4"	H7
3/8"	H7
1/2"	H7
5/8"	H7
Recommended fit for shaft on customer side is g6.	

© Fritz Kübler GmbH, subject to errors and changes. 11/2021