Finger guards

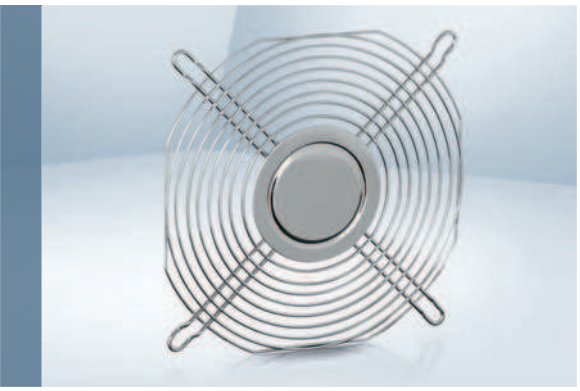

- **Material:** Galvanized or nickel-plated steel wire
- **Note:** Finger guard according to DIN EN ISO 13857 (previously EN 294).
  Additional finger guards that do not satisfy DIN EN ISO 13857 available on request.
  Our finger guards are designed specifically to be uses with ebm-papst fans. They combine the highest degree of safety with minimum effect on the operating noise. Please note that the safety-related clearances cannot be guaranteed when finger guards made by other manufacturers are used.

Fan size	Fan series	Type	Order number	Side	Drawing see page
40 x 40	400 F, 400, 420 J	**LZ29-1**	9920029001	Intake/Outlet	255
50 x 50	500 F	**LZ31**	9920031000	Intake/Outlet	255
60 x 60	600 F, 620, 630, 600 N, 600 J	**LZ28** **LZ28-1**	9920028000 9920028001	Intake/Outlet	255
80 x 80	8450, 8400 N, 8300 N, 8200 J, 8000 N, CoR 8200 J	**LZ22-2** **LZ32-4** **LZ22-N** **LZ32-14**	9920022002 9920032004 9920022001 9920145006	Intake/Outlet	255
92 x 92	3400 N, 3300 N, 3200 J, 3250 J, 3900, 3000	**LZ23** **LZ23-1**	9920023000 9920023001	Intake/Outlet	255
119 x 119	4400 F, 4400 FN, 4300 N, 4400, 4100 N, 4000 N, 4000 Z, 9900	**LZ20** **LZ30**	9920020000 9920030000	Intake/Outlet	255
		LZ30-3 **LZ30-4**	9920030003 9920030004		256
	DV 4100	**LZ30-4**	9920030004	Intake/Outlet	256
127 x 127	DV 5200	**LZ35**	9920035000	Intake/Outlet	256
	5200 N, 5900	**LZ35** **LZ35-2**	9920035000 9920035002	Intake/Outlet	256
135 x 135	5100 N, 5600	**LZ25**	9920025000	Intake/Outlet	256
140 x 140	5300, 5300 TD	**LZ53**	9920053000	Intake/Outlet	256
Ø 150	7100 N, 7200 N	**LZ24**	9920024000	Intake/Outlet	256
		LZ27 **LZ36**	9920027000 9920036000	Intake/Outlet	257
Ø 172	6300 N, 6300 NTD, 6300, 6300 TD	**LZ26** **LZ37** **LZ37-10** **LZ38**	9920026000 9920037000 9920145004 9920038000	Intake/Outlet	257
	DV 6300	**LZ39** **LZ52**	9920039000 9920052000	Outlet side Intake side	257
172 x 150	6400, 6400 TD	**LZ38**	9920038000	Intake/Outlet	257
172 x 160	DV 6400, DV 6400 TD	**LZ38**	9920038000	Intake side	257
220 x 200	2200 FTD	**LZ22**	9920022000	Intake/Outlet	257
Fan unit		**LZ38-1**	9920038001		257

Subject to change

All measurements are given in mm.

ebmpapst

Finger guards

LZ29-1 — Fan size 40 x 40

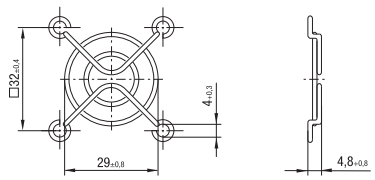

LZ31 — Fan size 50 x 50

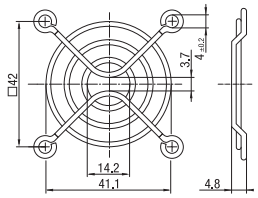

LZ28 — Fan size 60 x 60

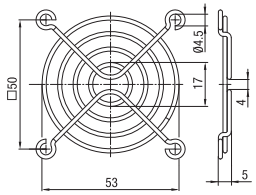

LZ28-1 — Fan size 60 x 60

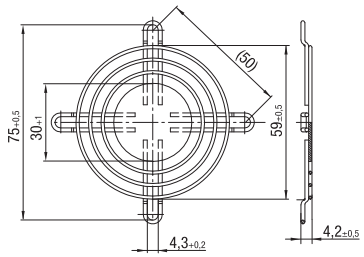

LZ22-2 — Fan size 80 x 80

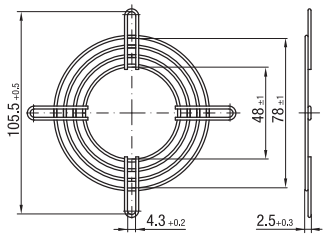

LZ32-4 — Fan size 80 x 80

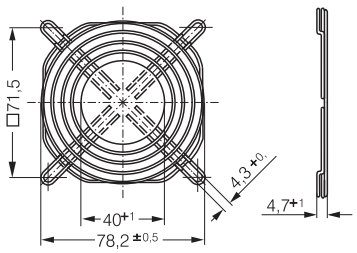

LZ22-N — Fan size 80 x 80

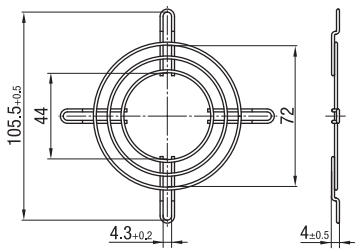

LZ32-14 — Fan size 80 x 80

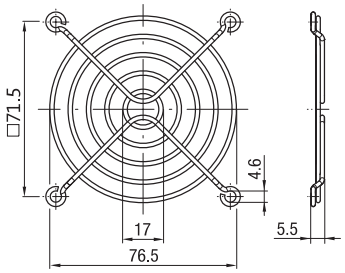

LZ23 — Fan size 92 x 92

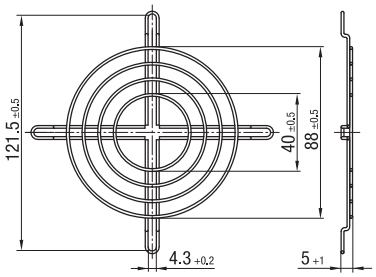

LZ23-1 — Fan size 92 x 92

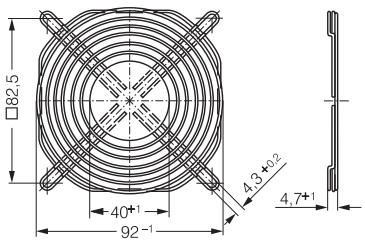

LZ20 — Fan size 119 x 119

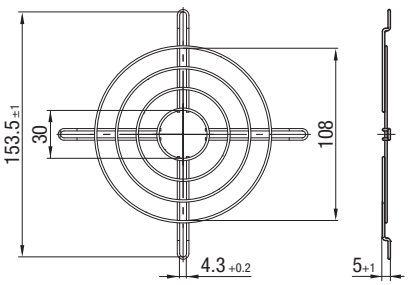

LZ30 — Fan size 119 x 119

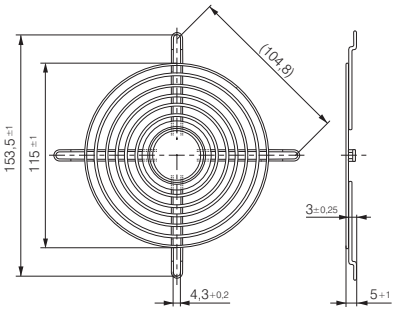

Finger guards

LZ30-3 — Fan size 119 x 119

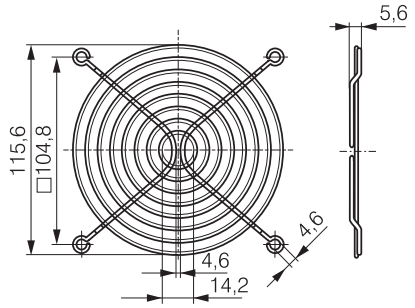

LZ30-4 — Fan size 119 x 119

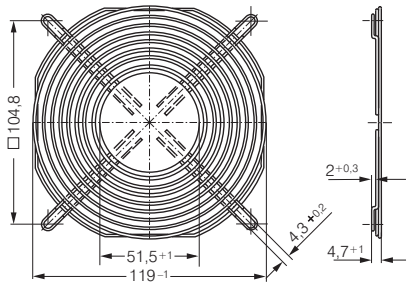

LZ35 — Fan size 127 x 127

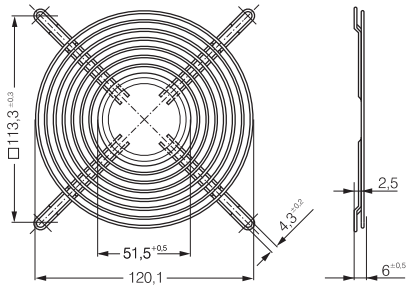

LZ35-2 — Fan size 127 x 127

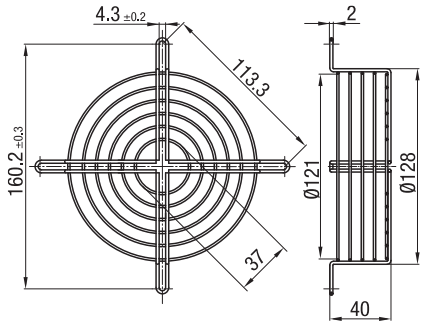

LZ25 — Fan size 135 x 135

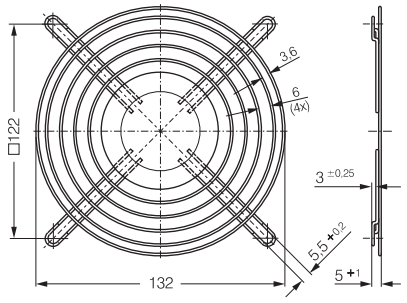

LZ53 — Fan size 140 x 140

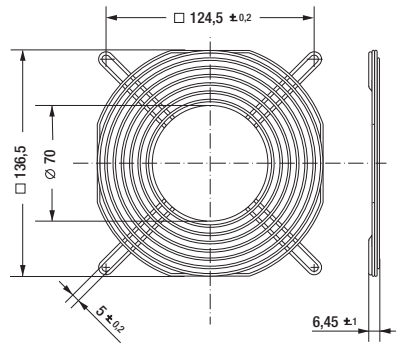

LZ24 — Fan size Ø 150

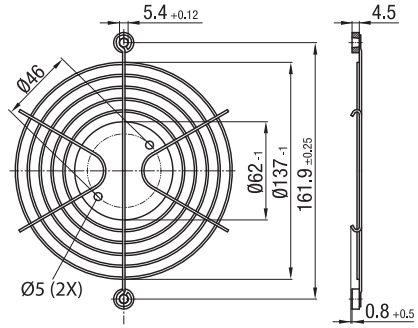

LZ27 — Fan size Ø 150

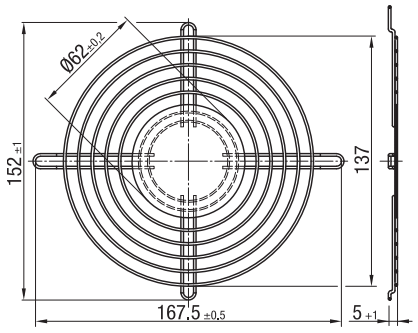

LZ36 — Fan size Ø 150

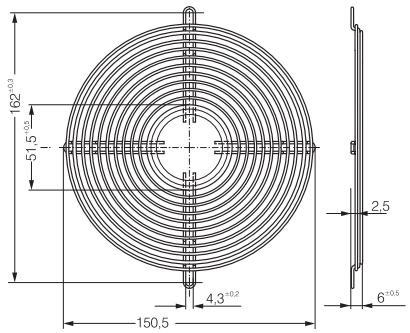

LZ26 — Fan size Ø 172

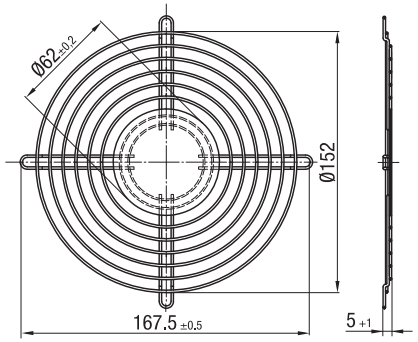

LZ37 — Fan size Ø 172

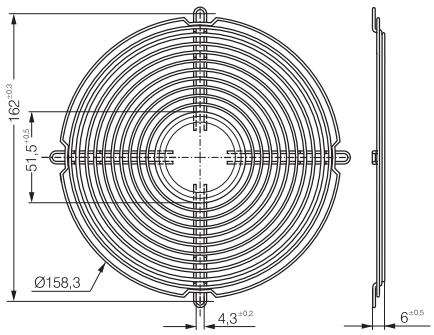

LZ37-10 — Fan size Ø 172

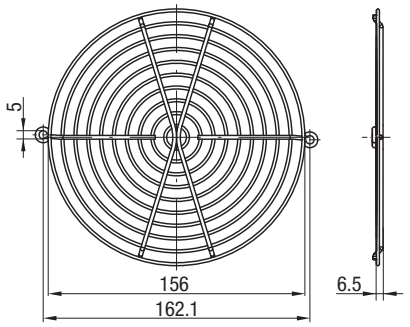

ebmpapst

Finger guards

LZ38-1 — Fan unit

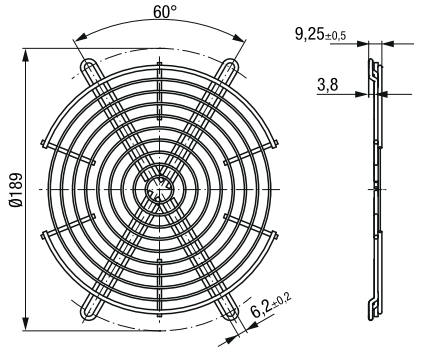

LZ39 — Fan size Ø 172

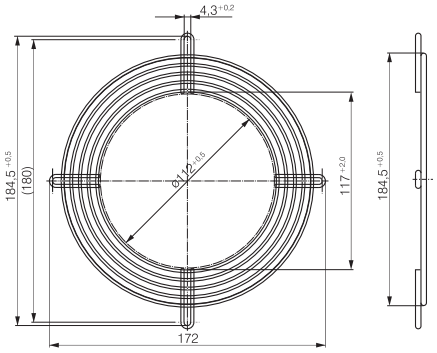

LZ52 — Fan size Ø 172

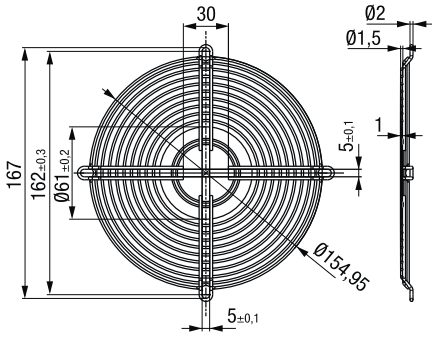

LZ38 — Fan size 172 x 150 / 172 x 160 / Ø 172

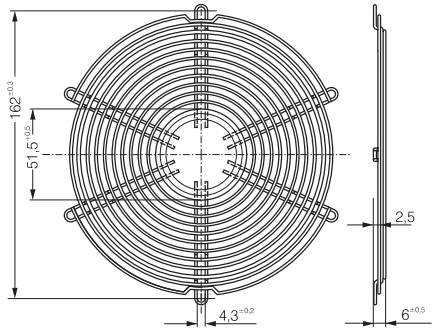

LZ22 — Fan size 220 x 200

