Rolled knuckle continuous hinge - 20 mm width

Model : 42-1-3664



Opening angle 270°. Other lengths and pin materials are available on request.
Specific drilling requirements are also available on request.

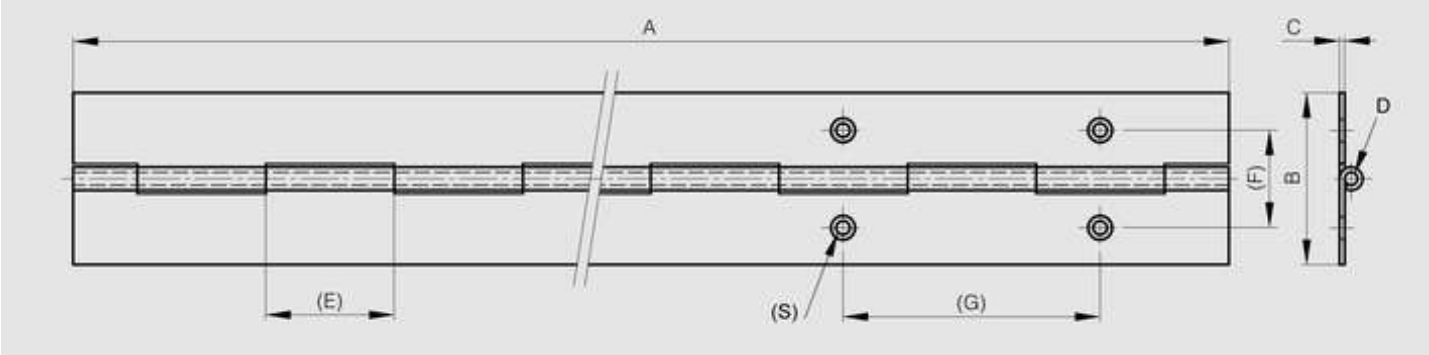

© PINET INDUSTRIE 2014

Material	304 stainless steel
Finish	raw
A (length)	2040
D (pin diameter)	2
B (width)	20
C	0.8
E	15
Weight (g)	320
Opening angle	270
Note	undrilled
Material	stainless steel
Functions	continuous hinges
Pin material	stainless steel

© PINET INDUSTRIE 2014