INSTALLATION INSTRUCTION

Shaft support

OETLZX58



OETLZX58

Example of OT40F8

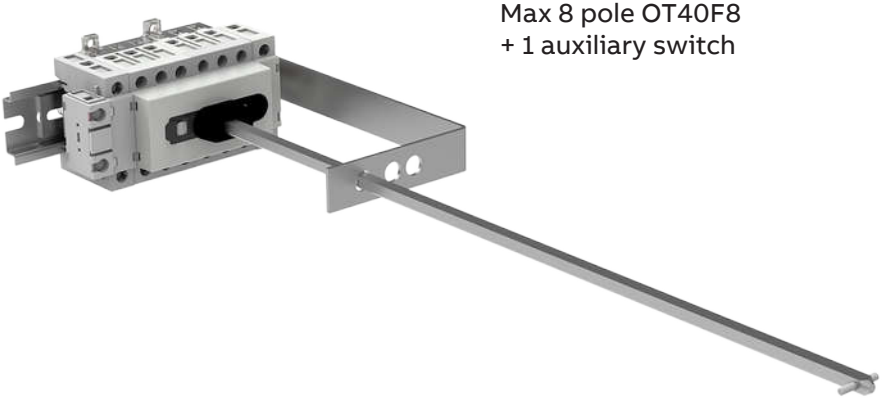

OT16-40F
Max 8 pole OT40F8
+ 1 auxiliary switch

Example of OT80F6

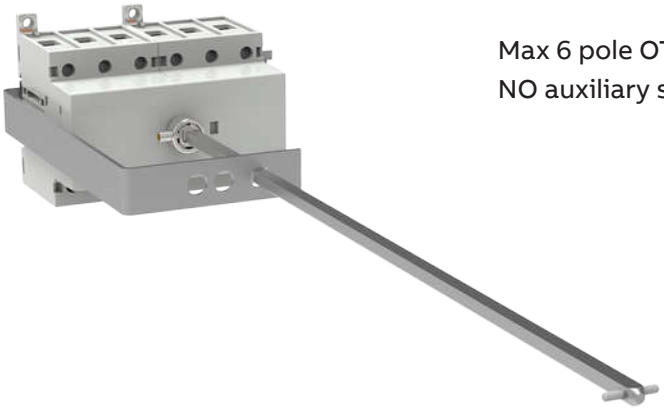

OT63-80F

Max 6 pole OT80F6 and
NO auxiliary switch

Example of OT125F4

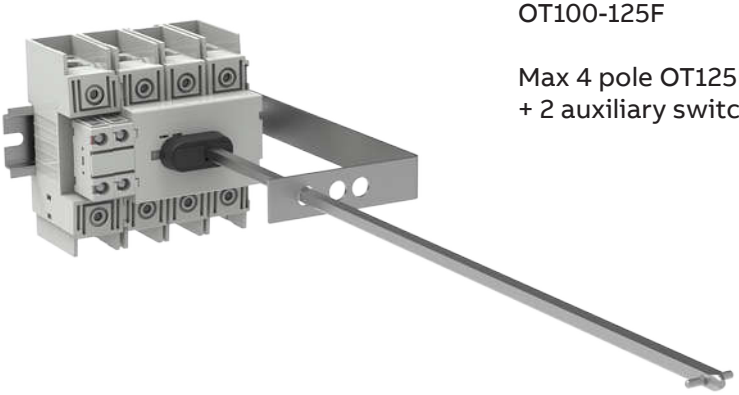

OT100-125F

Max 4 pole OT125F4_
+ 2 auxiliary switches

Contact us

ABB Oy
P.O. Box 622
FI-65101 Vaasa
Finland

abb.com/lowvoltage

© Copyright 2021 ABB. All rights reserved.
Specifications subject to change without notice.

34 OETLZX58 rev. A / 1SCC390176M0201 # 16.08.2021