Brand of NTN corporation

Technical data



6208N

Single row deep groove ball bearings

Deep groove ball bearing, radial contact, pressed steel cage, snap ring groove on outer diameter, open

VISUAL (S)

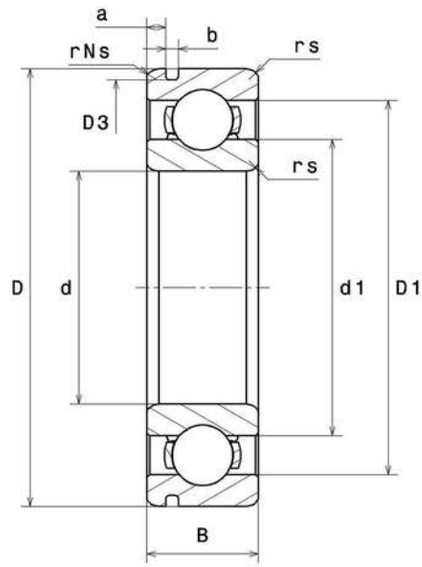

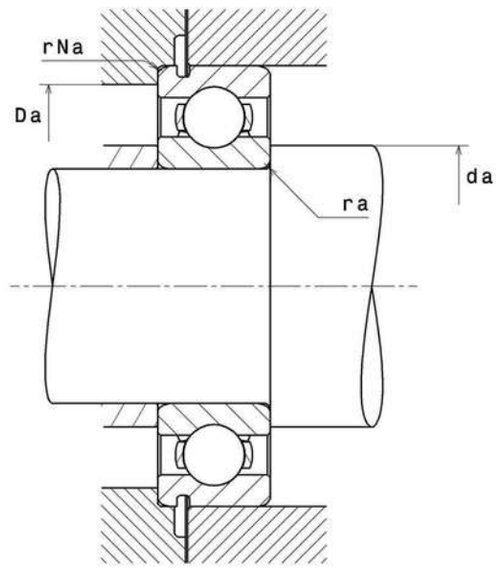

6208N
Single row deep groove ball bearings

PRODUCT DEFINITION	
Brand	SNR
d - Internal diameter	40 mm
D - External diameter	80 mm
B - Bearing/Inner ring width	18 mm
d1 - External diameter inner ring	50,3 mm
D1 - Inner diameter outer ring	70,4 mm
a min - Min position Groove	3,07 mm
a max - Max position groove	3,28 mm
rs - Min fillet radius	1,1 mm
rNs - Min fillet radius	0,5 mm
D3 - Max bottom groove diameter	76,81 mm
b min - Min groove width	1,9 mm
b max - Max groove width	2,2 mm
r0 max - Max bottom groove radius	0,6 mm
Radial clearance class	CN
Mass	0,373 kg

PRODUCT PERFORMANCE	
C - Dynamic load	30700000 mN
C0 - Static load	17900000 mN
Cu - Fatigue limit load	810000 mN
f0 - Coefficient	14
N ref - Reference thermal speed	55800 °/s
N lim - Mechanical Limit Speed	84000 °/s

PRODUCT PERFORMANCE	
Tmin - Min operating temperature	233,15 °K
Tmax - Max operating temperature	393,15 °K

BEARING FREQUENCIES	
BPFO - Over rolling frequency on outer ring (60 rpm)	3.607 Hz
BPFI - Over rolling frequency on inner (60 rpm)	5.393 Hz
BSF - Over rolling frequency on rolling element (60 rpm)	4.841 Hz
BRF - Rotational frequency – rolling element (60 rpm)	2.421 Hz
FTF - Rotational frequency - cage (60 rpm)	0.401 Hz

ABUTMENT	
da min - Min shoulder diameter IR	46,5 mm
Da max - Max shoulder diameter OR	73,5 mm
ra max - Max shaft & housing fillet radius	1 mm
rNa max - Max fillet radius on segment side	0,5 mm

INDUSTRY CALCUL FACTORS

Equivalent dynamic radial load

P = X.Fr + Y.Fa

$\frac{f_0 F_a}{C_0}$	e	Fa / Fr ≤ e		Fa / Fr > e	
		X	Y	X	Y
0.172	0.19	1	0	0.56	2.3
0.345	0.22				1.99
0.689	0.26				1.71
1.03	0.28				1.55
1.38	0.3				1.45
2.07	0.34				1.31
3.45	0.38				1.15
5.17	0.42				1.04
6.89	0.44				1

Equivalent static radial load

Po = Xo.Fr + Yo.Fa

X_0	Y_0
0.6	0.5

For single or DT bearing arrangement :

If Po <Fr, then use Po = Fr