DLRO test leads fitted with duplex Connectors

DLRO test leads



- **Carry one lead set and swap terminations**
- **Simple push and twist for a quick change**
- **Lockable twist cap secures the leads**
- **Four terminal 10 A test lead system**
- **Warning / Indicator lights for DLRO10 range**
- **Extension leads available**

DESCRIPTION

Duplex connect test lead system for use with any Megger 10 A DLRO and BT51 instruments

The Megger DLRO duplex connect four terminal test lead system is designed to provide the most cost effective and convenient way to provide the user with all of the test lead terminations and lead lengths required for the many different applications encountered in low resistance testing.



At the centre of this unique test lead system is a bespoke connector allowing terminations such as kelvin clips or duplex test probes to be changed as required. There are two connector versions, one being fitted with indicator LEDs that operate with the DLRO10 range of instruments. The indicator LEDs provide enhanced safety and convenience with indications as follows:

DLRO10, DLRO10X, DLRO10HD and DLRO10HDX

- Warning of connection to hazardous live voltage (Not DLRO10X, warning is given on the display)
- When continuity is made
- When a test complete and measurement is on instrument display

DLRO10X adds

- Indication of pass / fail to user set test limits

All of these important indications are therefore seen near the point of connection without needing to view the instrument display. There is even a 6 m extension lead to provide the ultimate in flexibility.

SAFETY WARNINGS

These safety warnings must be read and understood before the instrument is used.

Always refer to the user manual of the instrument being used with these test leads.

Do not touch the universal connector during test or while connected to hazardous voltages.

Whenever possible, circuits should be de-energised before testing.

If it is impossible to de-energise the circuit, (e.g. high voltage batteries cannot be switched off while their connections are tested) the user must be aware of the dangers. The instrument terminals will become live when connected to the circuit. Therefore when used on hazardous voltages the Megger terminal cover (available separately) must be used. See the accessories section of this user guide.

When running any test, or when attached to a test load, do not undo the modular connections. Isolate both test leads before changing any part of the modular leadset.

These test leads on their own not safety CAT rated due to the bare hook terminations. However when fitted with insulating instrument terminal covers and a suitably rated test termination the overall safety CAT rating will be the lowest of the ratings between the instrument, the terminal covers and the test termination.

DLRO test leads fitted with duplex Connectors

DLRO test leads

For example if used with a DLRO10HD fitted with terminal cover part number 1002-390 and a pair of DP1-C duplex probes the safety rating of the complete system will be CAT III 300 V. However if the test terminations were changed to KC1-C Kelvin clips the safety rating would drop to <30 V as the KC1-C are un-rated.

Testing inductive circuits can be hazardous:

- After testing an inductive load there will be an amount of energy stored in the inductance. This energy is released in the form of a discharge current. Disconnecting an inductive load while current is still flowing will cause a high voltage arc, which is a danger to both the user and the item under test
- The DLRO connector lit lead sets are fitted with a 'test in progress lamp' associated with the TEST button which indicates that current is flowing in the C1-C2 loop. For testing large inductive resistances the current carrying leads should be connected securely to the item under test before starting the test
- It is not recommended that duplex handspikes be used to carry out tests on inductive loads. If inadvertently using the handspikes on an inductive load, the L1 lamp on the handspikes will flash amber while discharge current flows, thereby duplicating the function of the 'I' lamp on the instrument. It is important to maintain contact until the L1 light stops flashing amber and turns green indicating the end of the test

This product is not intrinsically safe. Do not use in an explosive atmosphere.

Do not operate the test leads or connect to any external system if any visible signs of damage are apparent or if they have been stored for prolonged periods in unfavourable conditions.

Inspection

Before each use of the test leads, perform a thorough visual inspection to confirm that their condition is good, with no damaged or broken insulation.

The Measurement Category rating of the measurement system is that of the lowest rated component. If any part of the measurement leads is unrated, the instrument is safe for connection only up to 30 V.

APPLICATION

DUPLEX CONNECT SYSTEM – COMPONENT PARTS

CONNECT TEST LEADS WITH INDICATOR LIGHTS



These duplex test leads are single test leads supplied without terminations.

	Test Lead (1 supplied)	Order part number:
TL1.5-CL	1.5 m connect lit	1006-456
TL3-CL	3 m connect lit	1006-458
TL6-CL	6 m connect lit	1006-459

Lead resistances - C hook termination to connector

1.5 m lead (1 off)	20 m ohm
3 m leads (1 off)	30 m ohm
6 m leads (1 off)	40 m ohm

Description

These duplex test leads are fitted with hook terminations for connecting to an instrument and a connector plug equipped with ultra-bright LED indicator lights viewable from any direction.

Test connection terminations are supplied separately.

The duplex connector incorporates a locking ring to prevent test connections being pulled off in use.

Indicator lights operate with DLRO10, DLRO10X and DLRO10HD via third connection plug. The function of these indicator lights are listed at the beginning of this document in the introduction.

These leads are designed to fit:

- DLRO10
- DLRO10X
- DLRO10HD
- DLRO10HDX

DLRO test leads fitted with duplex Connectors

DLRO test leads

CONNECT TEST LEADS WITHOUT INDICATOR LIGHTS



These duplex test leads are single test leads supplied without terminations.

	Test Lead (1 supplied)	Order part number:
TL1.5-C	1.5 m connect	1006-452
TL3-C	3 m connect	1006-454
TL6-C	6 m connect	1006-455

Lead resistances - C hook termination to connector

1.5 m lead (1 off)	20 m ohm
3 m leads (1 off)	30 m ohm
6 m leads (1 off)	40 m ohm

Description

These duplex test leads are fitted with hook terminations for connecting to an instrument and a Connex plug.

Test connection terminations are supplied separately.

The duplex connector incorporates a locking ring to prevent test connections being pulled off in use.

These leads are designed to fit:

- DLRO10
- DLRO10X
- DLRO10HD
- DLRO10HDX

There are separate versions available to fit the BT51 as follows:

	Test Lead (1 supplied)	Order part number:
TL3-C-BT51	3 m connect for BT51	1007-023
TL6-C-BT51	6 m connect for BT51	1007-024

CONNECT EXTENSION LEAD



EL6-C	Extension Lead 6 m connect (1 supplied)	1006-460

Lead resistance 40 m ohm

Description

This 6 m long duplex connect extension lead is designed to extend the duplex connect test leads that are without indicator lights.

More than one extension lead can be used to create even longer test lead lengths. However the overall lead resistance must be taken into account. The higher the overall loop resistance, including the test piece, the lower the maximum test current available will be.

Any 10 A DLRO instrument fitted with a pair of 3 m test leads and any test lead terminations (duplex probes or kelvin clips) can have up to 2 x 6 m extension leads used and still be able to supply 10 A test current. This is because the overall resistance of this combination is below the 100 m ohm lead resistance maximum specified.

These extension leads are designed to fit any of these test leads:

- TL1.5-C
- TL3-C
- TL3-C-BT51
- TL6-C
- TL6-C-BT51

Note: These extension leads will not fit any of the leads fitted with indicator lights

DLRO test leads fitted with duplex Connectors

DLRO test leads

LEAD TEST CONNECTION TERMINATIONS AVAILABLE – SOLD INDIVIDUALLY

DUPLEX CONNECT PROBE



DP1-C

Duplex Probe 1 - connect Order part number: 1006-450

Description

Duplex connect handspike with sprung loaded tips fitted with a connector socket for easy connection to any connector test lead.

Replaceable probe tips have hardened needle points, gold plated for excellent low resistance contact. Tips are sprung to provide 1.3 kg of force using stainless steel springs.

Ideal for general applications where a good reliable connection is required on none coated or corroded surfaces. To further limit the possibility of damage to test piece waffle tip, sometimes referred to a serrated tips are available as an option.

Maximum current rating	10 A
Connector to probe tip resistance	14 m ohm
Probe spacing between P and C tips:	6 mm
Will fit	Any duplex connect test lead and extension lead
Safety	CAT III 600 V only when suitable terminal covers are used

Spare / optional parts	**Part number:**
Replacement sprung probe contacts (2pk, complete with insertion tool)	1008-024
Waffle / serrated P tip (2pk)	1010-929

DUPLEX CONNECT TWIST PROBE



DTP1-C

Duplex Twist Probe 1 - Connect Order part number: 1006-449

Description

Duplex connect handspike with sprung twisting tips fitted with a connector socket for easy connection to any connect test lead.

As the probe is pressed onto the test piece the tips compress and twist at the same time providing 2.4 kg of spring force. Probe tips are hardened and tempered before four equal-spaced flats are ground to provide a square shape tip, making these probes ideal for cutting through surface coatings or corrosion on test piece for a good contact.

To assist reliability the probes internal electrical connections are assisted by using an innovative volute spring eliminating the need for a separate current carrying brad.

Maximum current rating	10 A
Connector to probe tip resistance	14 m ohm
Probe spacing between P and C tips:	10 mm
Will fit	Any Duplex Connex test lead and extension lead
Safety	<30 V only

DLRO test leads fitted with duplex Connectors

DLRO test leads

CONCENTRIC DUPLEX CONNECT PROBE



CP1-C

Concentric Probe 1 - connect Order part number: 1006-448

Description

Duplex connect concentric handspike with sprung loaded potential tip fitted with a connector socket for easy connection to any connector test lead.

The C connection is made via an outer hardened and tempered steel crown with two contact points or tips.

The replaceable central potential probe tip has a hardened needle point, gold plated for excellent low resistance contact. The P tip is sprung to provide 1.3kg of force and uses a stainless steel spring.

Ideal for general applications where a good reliable connection is required on none coated or corroded surfaces. The long probe length and small diameter makes this probe ideal for reaching deeply recessed terminal screws. There are also applications where connection to rivet heads or screw/bolt heads are required. To further limit the possibility of damage to test piece waffle tip, sometimes referred to a serrated tip is available as an option.

Maximum current rating	10 A
Connector to probe tip resistance	10 m ohm
Probe tip spacing:	
Between two outer C tips	7.6 mm
P tip central between two C tips with 3.8 mm spacing	
Probe dimensions:	
From finger guard to tip	110 mm
Diameter is tapered from 14 mm nearest the finger guard to 11 mm at tip crown	
Will fit	Any duplex connect test lead and extension lead
Safety	<30 V only

Spare / optional parts	**Part number:**
Replacement sprung probe contacts (2pk, complete with insertion tool)	1008-024
Waffle / serrated P tip (2pk)	1010-929

HEAVY DUTY KELVIN CLIP



KC1-C

Kelvin Clip 1 - connect Order part number: 1006-447

Description

Duplex connect Kelvin Clip 1 is a heavy duty clip for general purpose applications.

Maximum current rating	10 A
Connector to probe tip resistance	14 m ohm
Clip capacity:	40 mm
Will fit	Any duplex connect test lead and extension lead
Safety	<30 V only

DLRO test leads fitted with duplex Connectors

DLRO test leads

LARGE TOUCH PROOF INSULATED CLIP – ADJUSTABLE JAW OPENING



KC2-C

Kelvin Clip 2 - connect (x1) Order part number: 1006-451

Description

Duplex connect Kelvin Clip 2 is a fully insulated touch proof clip for applications where a high safety rating is required.

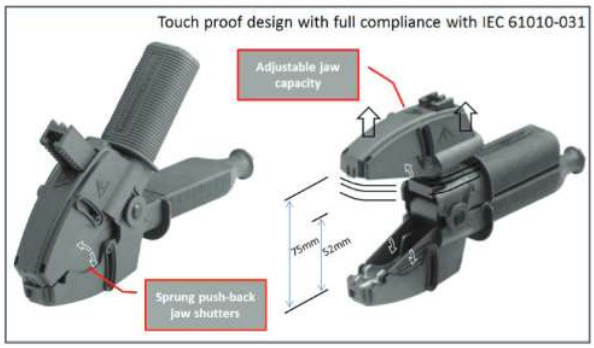

Maximum current rating	20 A
Connector to clip resistance	10 m ohm
Clip capacity:	52 mm to 75 mm with sliding jaw
Will fit	Any duplex connect test lead and extension lead
Safety	CAT IV 600 V

The actual safety CAT rating in use will always be the rating of the lowest part of the complete system For example if used with a DLRO10 without terminal covers the system will be unrated and must not be connected to live voltages above 30 V.

In this example using a DLRO10HD a terminal cover should also be used

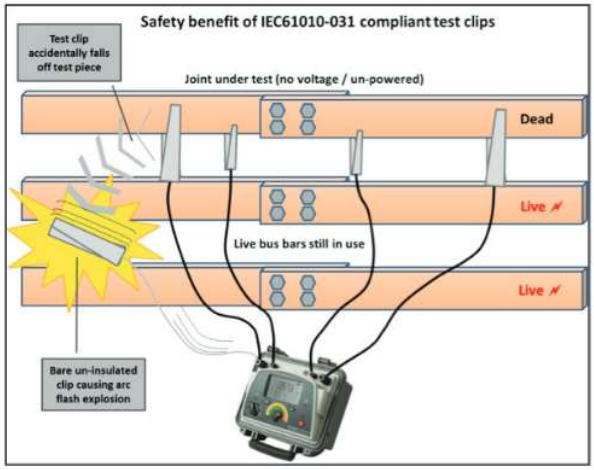

COMPLETE DUPLEX CONNECT LEAD SETS AVAILABLE

PROBE LEAD-SETS



DH1-C

3M Duplex Handspike lead set, with connect (x2)

Order part number: 1006-442

Description

Two wire, four terminal duplex twist probe lead set 3 m long.

Consists of the following:

DTP1-C	Duplex Twist Probe	2 off
TL3-C-BT51	3 m lead connect	2 off
Total leadset loop resistance		80 m ohm

Will fit:

- BT51
- BT51 120 V



DH2-C

6m / 20' version of DH1-C above but only 1 included

Order part number: 1006-443

Description

Single duplex twist probe lead - 6 m long.

Consists of the following:

DTP1-C	Duplex Twist Probe	1 off
TL6-C-BT51	6m lead connect	1 off
Total resistance - 1 lead + 1 probe		50 m ohm

Will fit:

- BT51
- BT51 120 V

DLRO test leads fitted with duplex Connectors

DLRO test leads



DH4-C

Two wire, four terminal duplex probe lead set - 1.5 m
One lead fitted with indicator lights.

Order part number: 1006-444

Description

Two wire, four terminal duplex probe lead set 1.5 m long. One lead fitted with indicator lights.

Consists of the following:

DP1-C	Duplex Probe	2 off
TL1.5-C	1.5 m connect lead	1 off
TL1.5-CL	1.5 m connect lead with indicator lights	1 off
Total leadset loop resistance		48 m ohm

Will fit:

- DLRO10
- DLRO10X
- DLRO10HD
- DLRO10HDX



DH4-CHDC

Order part number: 1002-390

As DH4-C but supplied with DLRO10HD terminal cover for CATIII 300 V rating

DH5-C

Order part number: 1006-445

as DH4-C but 3 m long

KELVIN CLIP LEAD-SETS



KC1-TL3-C

KL1-C Kelvin Clip 3 m Lead set - connect (x2)

Order part number: 1006-462

Description

Two wire, four terminal kelvin clip lead set 3 m long.

Consists of the following:

KC1-C	Kelvin clip	2 off
TL3-C	3 m connect lead	1 off
TL3-CL	3 m connect lead with indicator lights	1 off
Total leadset loop resistance		88 m ohm

Will fit:

- DLRO10
- DLRO10X
- DLRO10HD
- DLRO10HDX



KC2-TL3-C

KL2-C Insulated Kelvin Clip - Test Lead 3 m connect (x2)

Order part number: 1006-461

Description

Two wire, four terminal insulated kelvin clip lead set 3m long.

Consists of the following:

KC2-C	Insulated kelvin clip	2 off
TL3-C	3 m connect lead	1 off
TL3-CL	3 m connect lead with indicator lights	1 off
Total leadset loop resistance		80 m ohm

Will fit:

- DLRO10,
- DLRO10X
- DLRO10HD
- DLRO10HDX

DLRO test leads fitted with duplex Connectors

DLRO test leads

Megger

ORDERING INFORMATION

Description	Order Code
Duplex connect system	
Component parts - one of each supplied	
TL1.5-CL Connect test leads with indicator light - 1.5 m	1006-456
TL3-CL Connect test leads with indicator light - 3 m	1006-458
TL6-CL Connect test leads with indicator light - 6 m	1006-459
TL1.5-C Connect test lead without indicator light - 1.5 m	1006-452
TL3-C Connect test lead without indicator light - 3 m	1006-454
TL6-C Connect test lead without indicator light - 6 m	1006-455
TL3-C-BT51 Connect test leads for BT51 - 3 m	1007-023
TL6-C-BT51 Connect test leads for BT51 - 6 m	1007-024
EL6-C Connect Extension Lead - 6 m	1006-460
Lead test connection terminations available	
Terminations sold individually	
DP1-C Duplex connect probe	1006-450
DTP1-C Duplex connect twist probe	1006-449
CP1-C Concentric duplex connect probe	1006-448
KC1-C Heavy duty kelvin clip	1006-447
KC2-C Insulated connect Kelvin clip	1006-451

Description	Order Code
Complete duplex connect lead sets	
DH1-C Two wire, four terminal duplex twist probe lead set - 3 m	1006-442
DH2-C Single duplex twist probe lead - 6 m	1006-443
DH4-C Two wire, four terminal duplex probe lead set - 1.5 m One lead fitted with indicator lights.	1006-444
DH4-CHDC Two wire, four terminal duplex probe lead set 1.5 m long One lead fitted with indicator lights	
DLRO10HD terminal cover	1002-390
DH5-C Two wire, four terminal duplex probe lead set - 3 m One lead fitted with indicator lights.	1006-445
Kelvin clip lead-sets	
Two wire, four terminal kelvin clip lead set - 3 m	1006-462
Two wire, four terminal insulated kelvin clip lead set - 3 m	1006-461
Replacement contacts	
Replacement sprung probe contact tip (2pk, complete with insertion tool)	1008-024
Waffle / serrated P contact tip (2pk)	1010-929

SALES OFFICE
Megger Limited
Archcliffe Road Dover
CT17 9EN England
T +44 (0) 1304 502101
E UKsales@megger.com

DLROTestLeads_DS_en_V09
www.megger.com
ISO 9001
The word 'Megger' is a registered trademark

Megger