5mm pitch pluggable terminal blocks for vertical or 90° mounting

Product overview

- 2-12 pole interlocking
- Wire protector terminals
- Moulded in black UL94-V0 flame retardant PA66
- Cable acceptance - 0.32 to 1.3mm² (28-16AWG) solid and stranded cable
- Pluggable via pin strip header
- Test probe facility
- Dual horizontal or vertical mounting
- Captive screws
- cULus approved



SPECIFICATION	
Rating	UL=10A/300V IEC=17.5A/250V
Insulation resistance	500M Ω/500V
Withstand voltage	AC2000V/1min
Contact resistance	20mΩ (max)
Working temperature	-30°C to +120°C
Moulding	UL94-V0 flame retardant PA66
Pin/terminal	Tin plated brass
Wire protector	Phosphor bronze, nickel plated
Screw/torque	M2.5 steel, zinc plated 0.4Nm

PART NO.	POLES	LENGTH
CTBA1301/2	2	10mm
CTBA1301/3	3	15mm
CTBA1301/4	4	20mm
CTBA1301/5	5	25mm
CTBA1301/6	6	30mm
CTBA1301/7	7	35mm
CTBA1301/8	8	40mm
CTBA1301/9	9	45mm
CTBA1301/10	10	50mm
CTBA1301/11	11	55mm
CTBA1301/12	12	60mm

CTBA1301



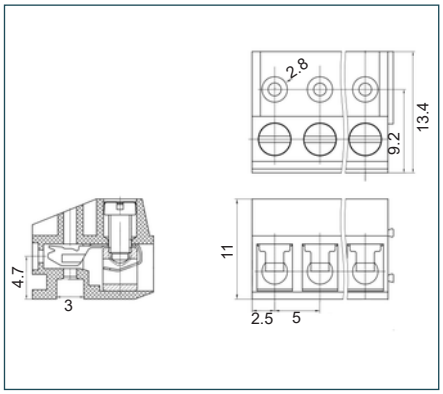

PART NO.	POLES
CTBA1301/PS2	2
CTBA1301/PS3	3
CTBA1301/PS4	4
CTBA1301/PS5	5
CTBA1301/PS6	6
CTBA1301/PS7	7
CTBA1301/PS8	8
CTBA1301/PS9	9
CTBA1301/PS10	10
CTBA1301/PS11	11
CTBA1301/PS12	12
CTBA1301/PS13	13
CTBA1301/PS14	14
CTBA1301/PS15	15
CTBA1301/PS16	16
CTBA1301/PS17	17
CTBA1301/PS18	18
CTBA1301/PS19	19
CTBA1301/PS20	20
CTBA1301/PS21	21
CTBA1301/PS22	22
CTBA1301/PS23	23
CTBA1301/PS24	24

5mm pitch 24 pin strip header

- Supplied in 24-way or pre-cut to size
- Easily cut to required length
- Moulded in UL94-V0 flame retardant PBT
- Anti solder wicking
- cULus approved

SPECIFICATION	
Rating	UL=10A/300V IEC=18A/250V
Insulation resistance	500M Ω/DC500V
Withstand Voltage	AC2000V/1min
Contact Resistance	20mΩ (max)
Working temperature	-40°C to +105°C
Soldering condition	250°C/ 5 seconds
Moulding	UL94-V0 flame retardant PBT
Pins	Brass tin plated
Recommended PCB hole size	ø1.6mm

CTBA1301 PS



